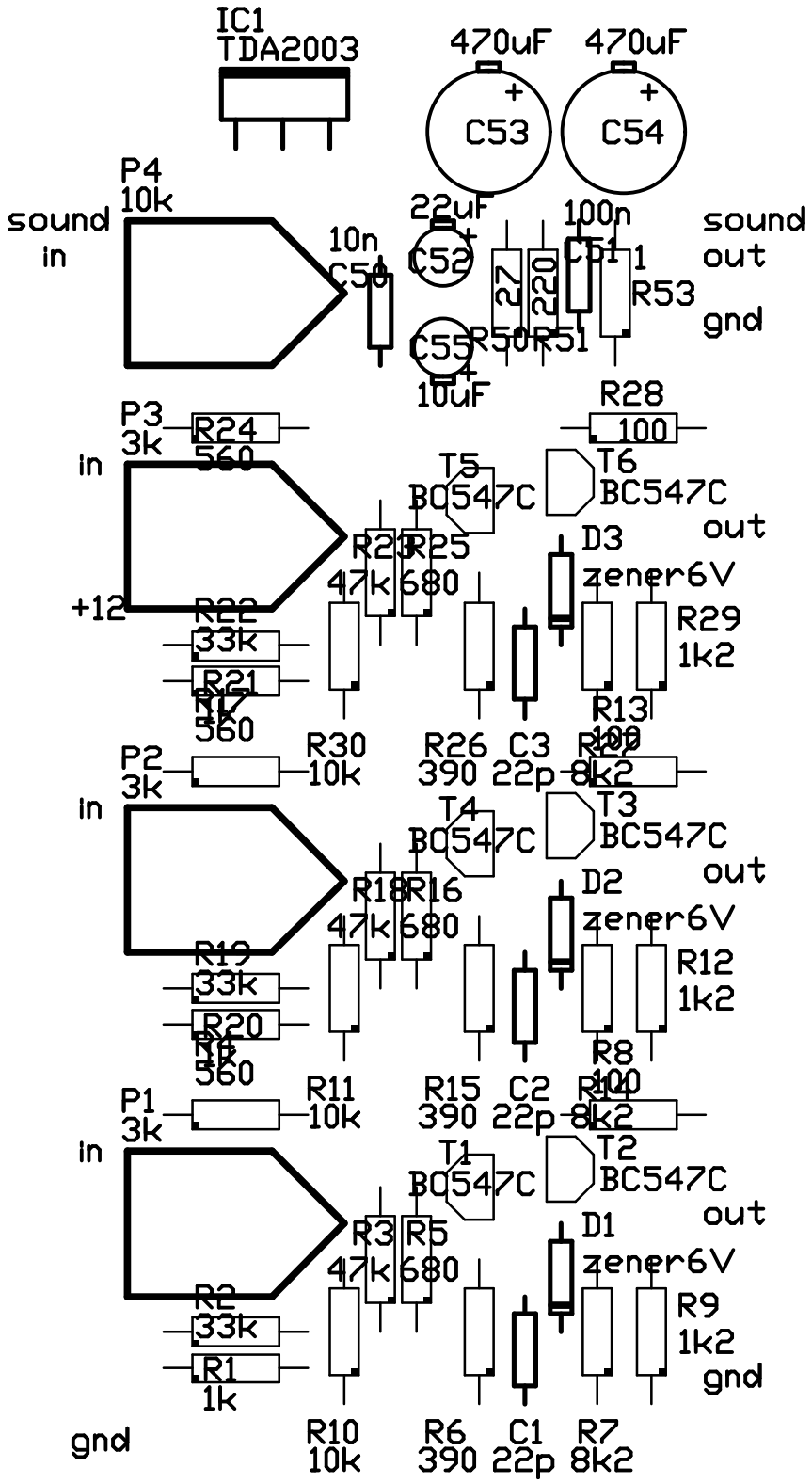
IC1
TDA2003
470uF
470uF
C53
C54
P4
10k
sound
in
10n
C50
22uF
C52
100n
C51
27
220
R53
sound
out
gnd
C55
R50
R51
10uF
R28
100
P3
3k
R24
560
in
T5
BC547C
T6
BC547C
out
R23
R25
47k
680
D3
zener6V
+12
R22
33k
R21
R17
560
R29
1k2
R13
100
R30
10k
R26
390
C3
22p
R27
8k2
P2
3k
in
T4
BC547C
T3
BC547C
out
R18
R16
47k
680
D2
zener6V
R19
33k
R20
R14
560
R12
1k2
R8
100
R11
10k
R15
390
C2
22p
R14
8k2
P1
3k
in
T1
BC547C
T2
BC547C
out
R3
R5
47k
680
D1
zener6V
R2
33k
R1
1k
R9
1k2
gnd
gnd
R10
10k
R6
390
C1
22p
R7
8k2