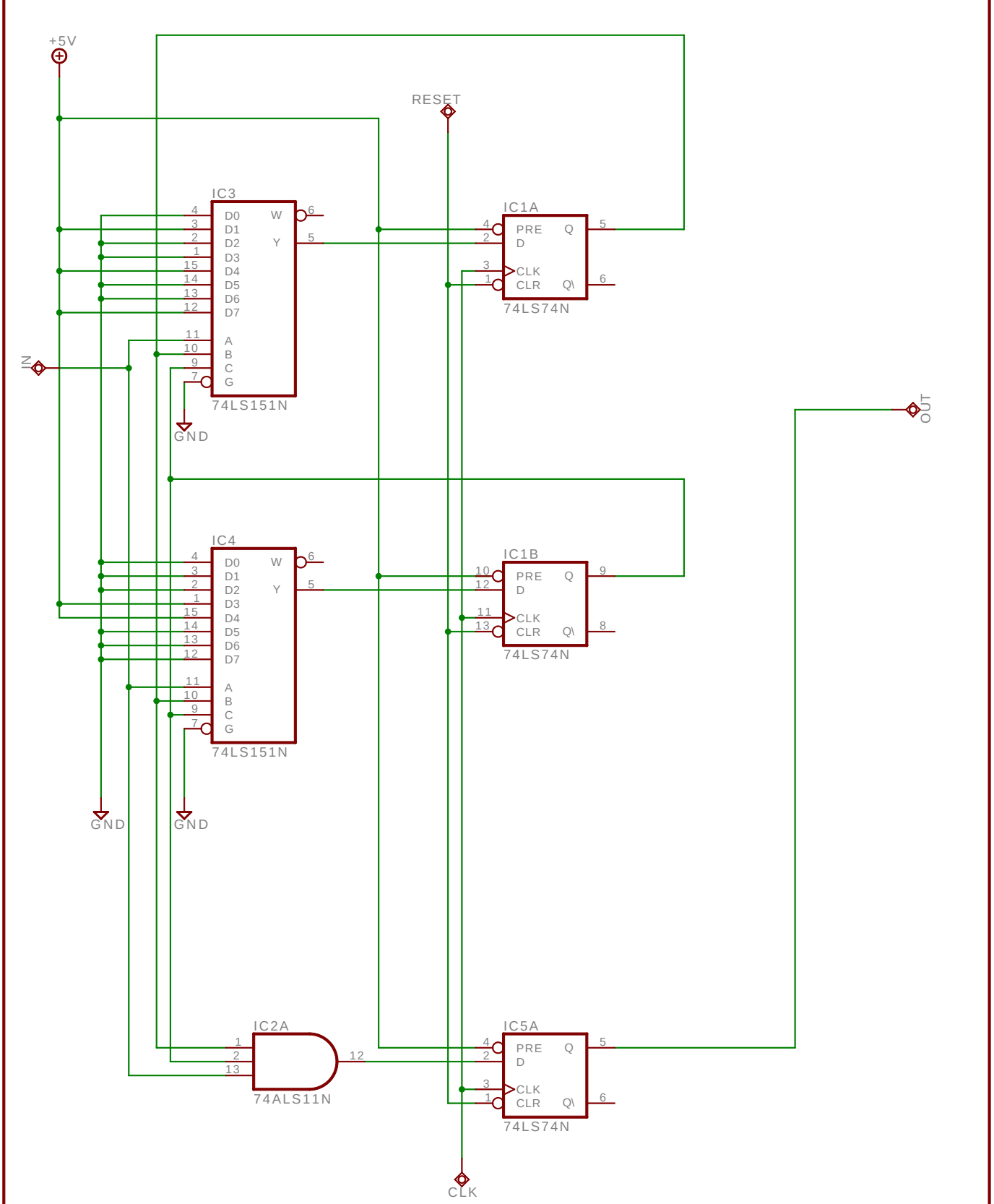

TITLE: q9

Document Number:

REV:

Date: 11/07/2003 15:13:02

Sheet: 1/1