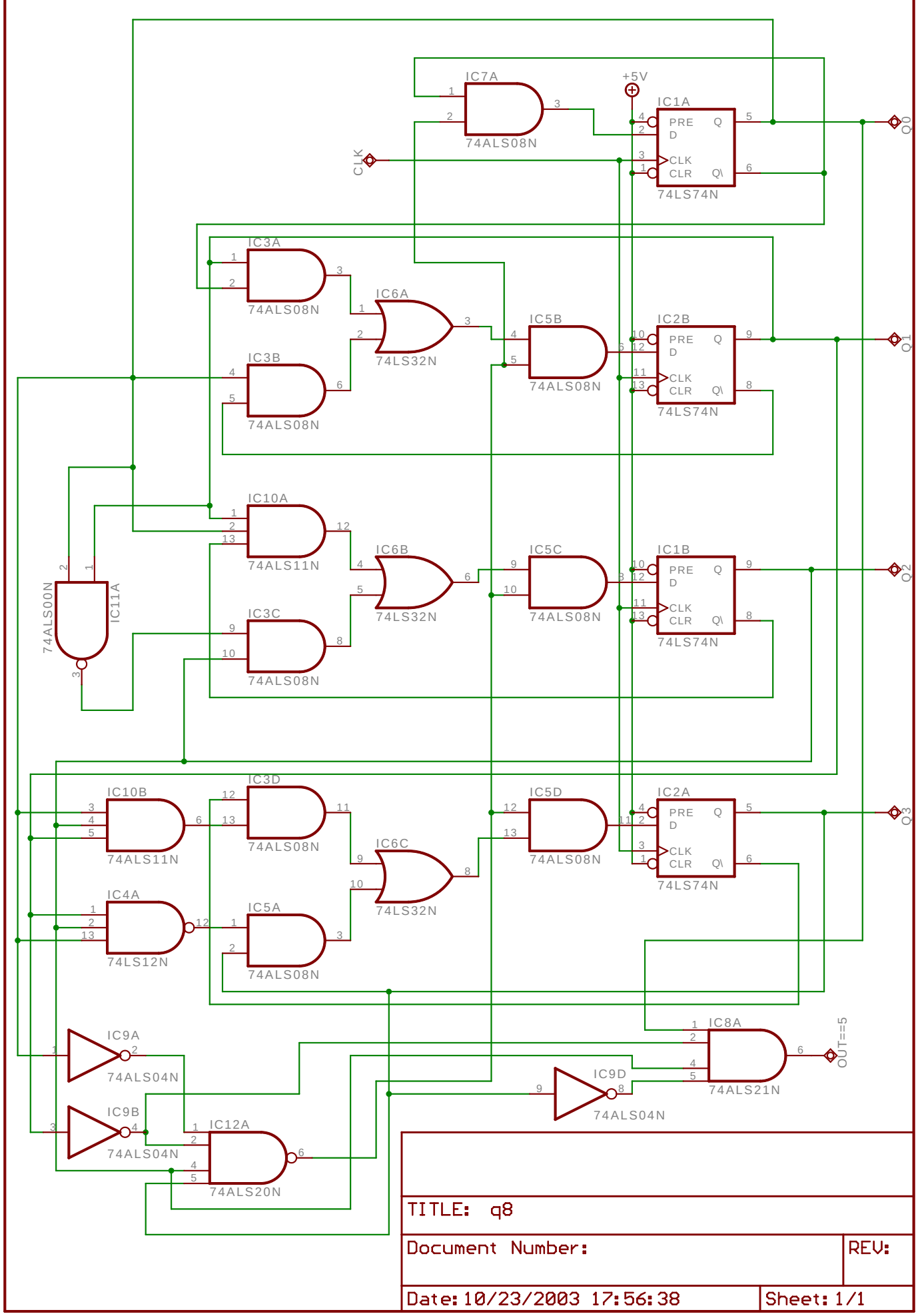
IC7A
74ALS08N
+5V
IC1A
PRE
D
CLK
CLR
Q
Q\
74LS74N
CLK
Q0
IC3A
74ALS08N
IC6A
74LS32N
IC5B
74ALS08N
IC2B
74LS74N
Q1
IC3B
74ALS08N
IC10A
74ALS11N
IC6B
74LS32N
IC5C
74ALS08N
IC1B
74LS74N
Q2
IC3C
74ALS08N
74ALS00N
IC11A
IC10B
74ALS11N
IC3D
74ALS08N
IC6C
74LS32N
IC5D
74ALS08N
IC2A
74LS74N
Q3
IC4A
74LS12N
IC5A
74ALS08N
IC9A
74ALS04N
IC9B
74ALS04N
IC12A
74ALS20N
IC9D
74ALS04N
IC8A
74ALS21N
OUT==5
TITLE: q8
Document Number:
REV:
Date: 10/23/2003 17:56:38
Sheet: 1/1