Components

Véronique Beauvois, Ir.
2018-2019

Specific components

Solutions – Essential rules

- Technical vs. economical constraints
- Global concept / Early stage
- If not, the risk is additional cost (3 to 5%)
- The margin to solve the problem is decreasing when time is running
- Another risk: additional delay
- No exact solution but engineering rules to follow
- Do not neglect any element (cabling, connections to ground…)
- Step by step solution to solve the problems.

Passive components vs. H.F.

- parasitic effects: parasitic R, L, C
- coil: saturation, hysteresis

R … [R L (nF)] C_p (pF)

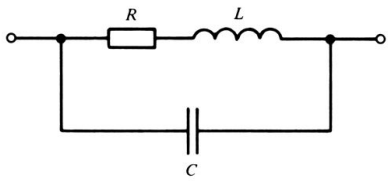

L … [L//Cp//R] R_s

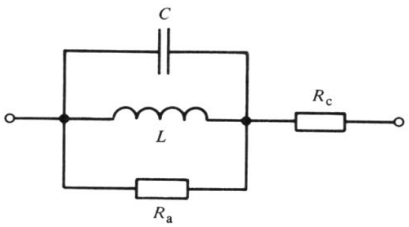

Passive components vs. H.F.

- parasitic effects: parasitic R, L, C
- C : parasitic R for dielectric losses ((f))

C … C L R_s

Cx : class X (MD)
Cy : class Y (MC)

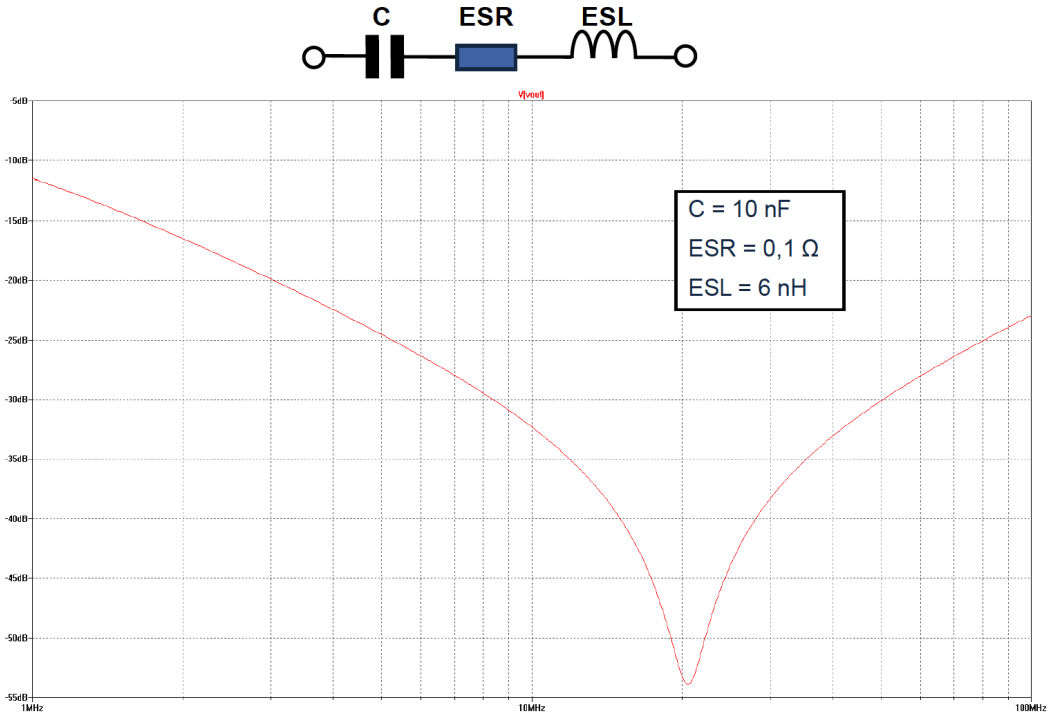

Passive components vs. H.F.

- C (f) ?
  - DC, LF : electrolytic, tantalum
  - BF coupling (<1MHz) : MKT, MKC
  - HF coupling : ceramic, mica
  - HF decoupling : ceramic

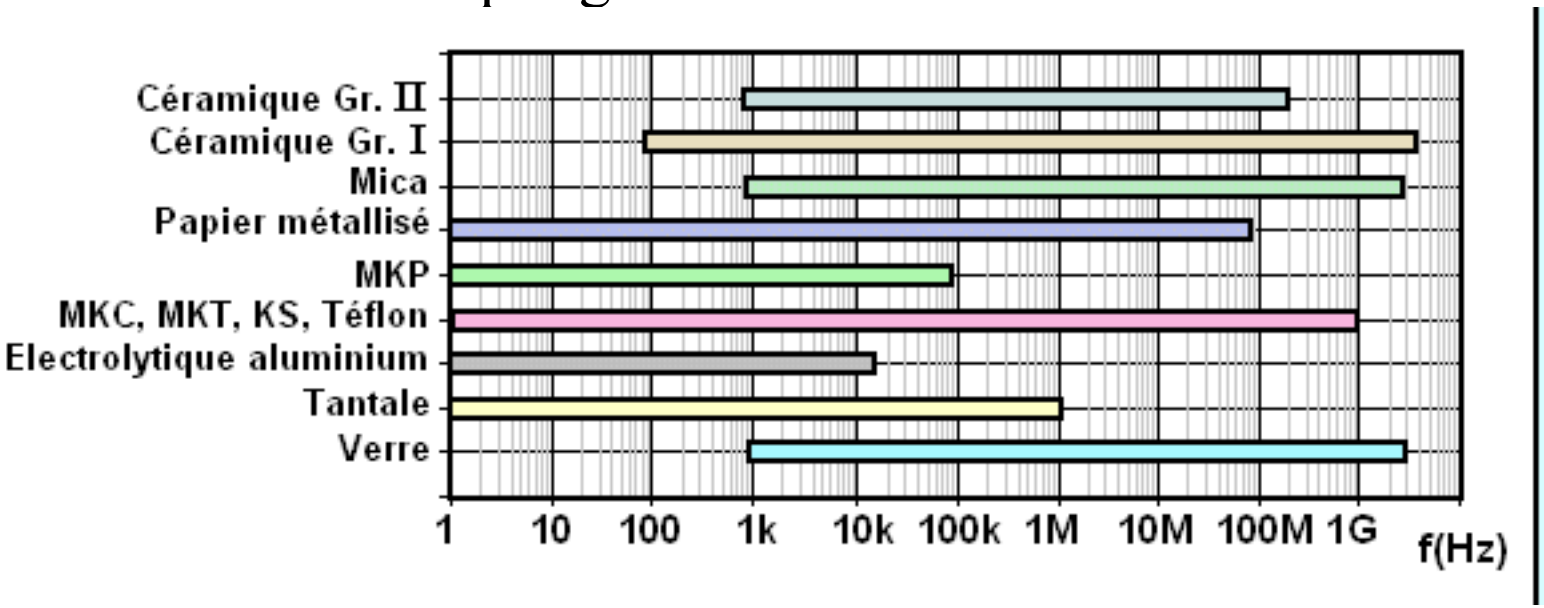

https://www.murata.com/en-us/products/emiconfun/capacitor/2013/02/14/en-20130214-p1

Specific components

- **conducted**
- radiated

performance measurement?
= decreasing of disturbance (U, I, P)
= Insertion Loss I.L.

$$= \frac{\text{amplitude of disturbance } \textbf{without} \text{ component}}{\text{amplitude of disturbance } \textbf{with} \text{ component}}$$

Specific components

Insertion loss

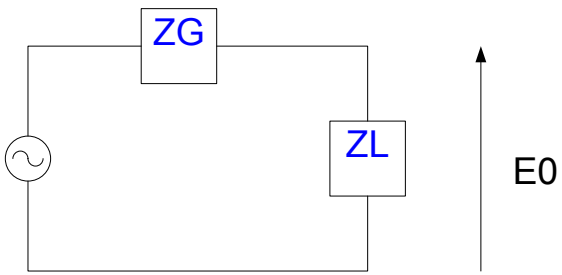

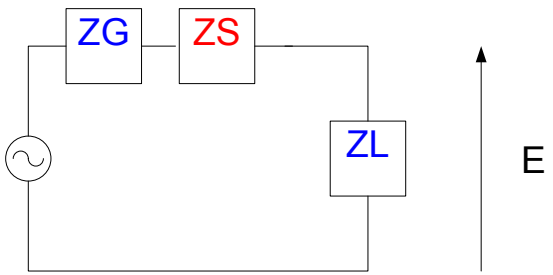

$$Att = 20\log_{10}\left(\frac{E0}{E}\right) = 20\log_{10}\frac{|ZG + ZL + ZS|}{|ZG + ZL|}$$

Conducted

- some components are bidirectionnal (EMI / EMS)
- importance of source and load impedances (see previous equation)
- take into acount the type of ports (power / signal)
- CM / DM or both
- …

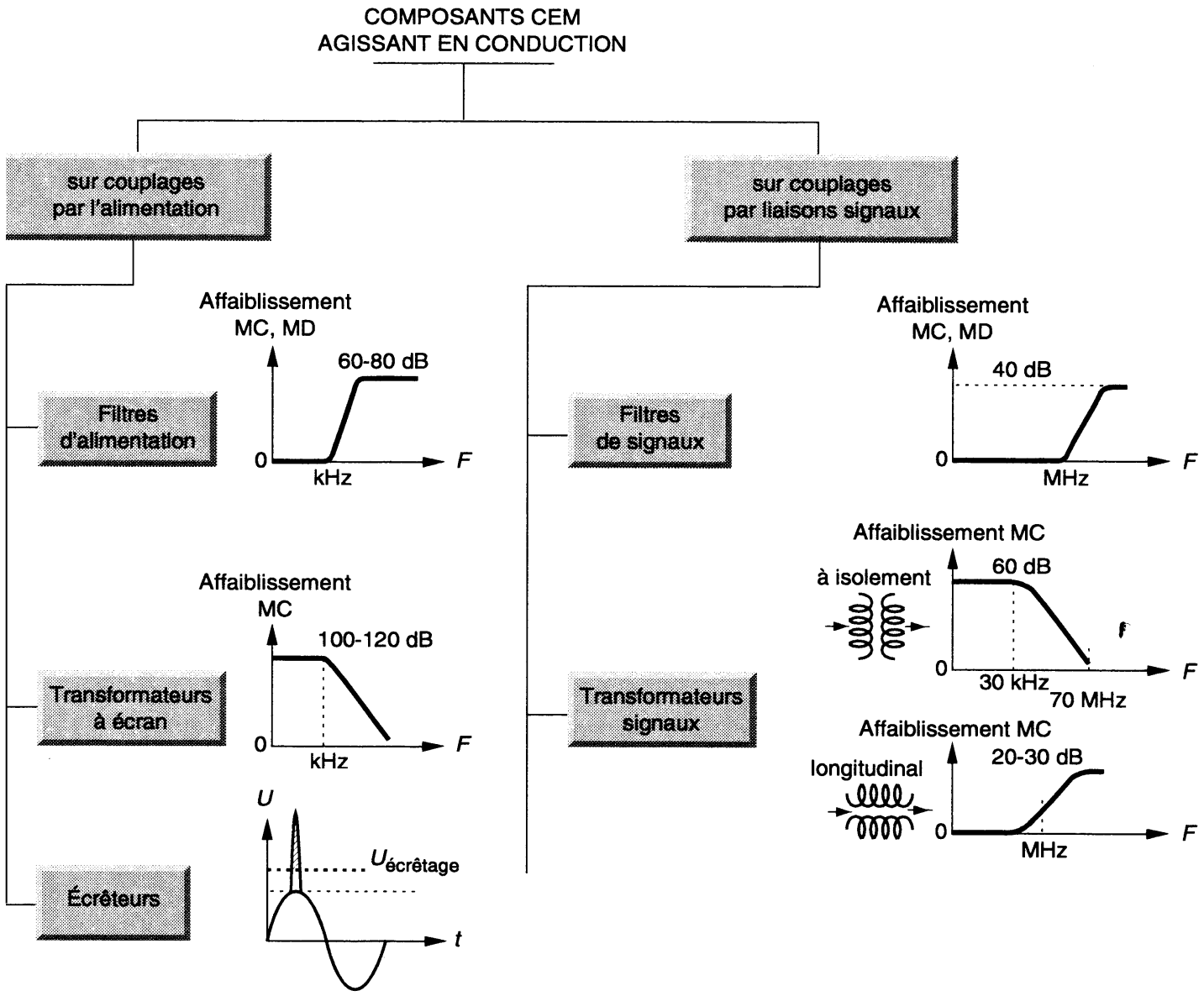

COMPOSANTS CEM
AGISSANT EN CONDUCTION

- sur couplages par liaisons signaux
  - Opto-coupleurs
  - Ferrites et câbles à pertes
  - Écrêteurs

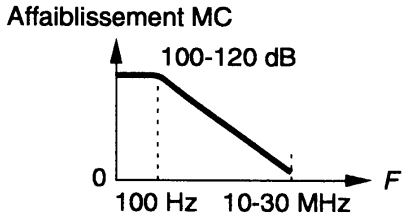

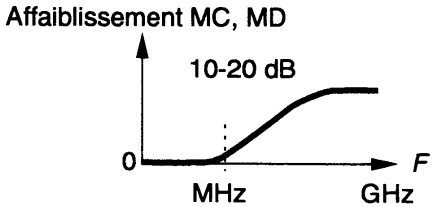

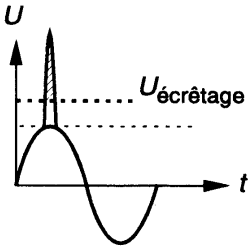

Filters

- to decrease disturbances from EUT to mains
- to decrease disturbances from mains to EUT

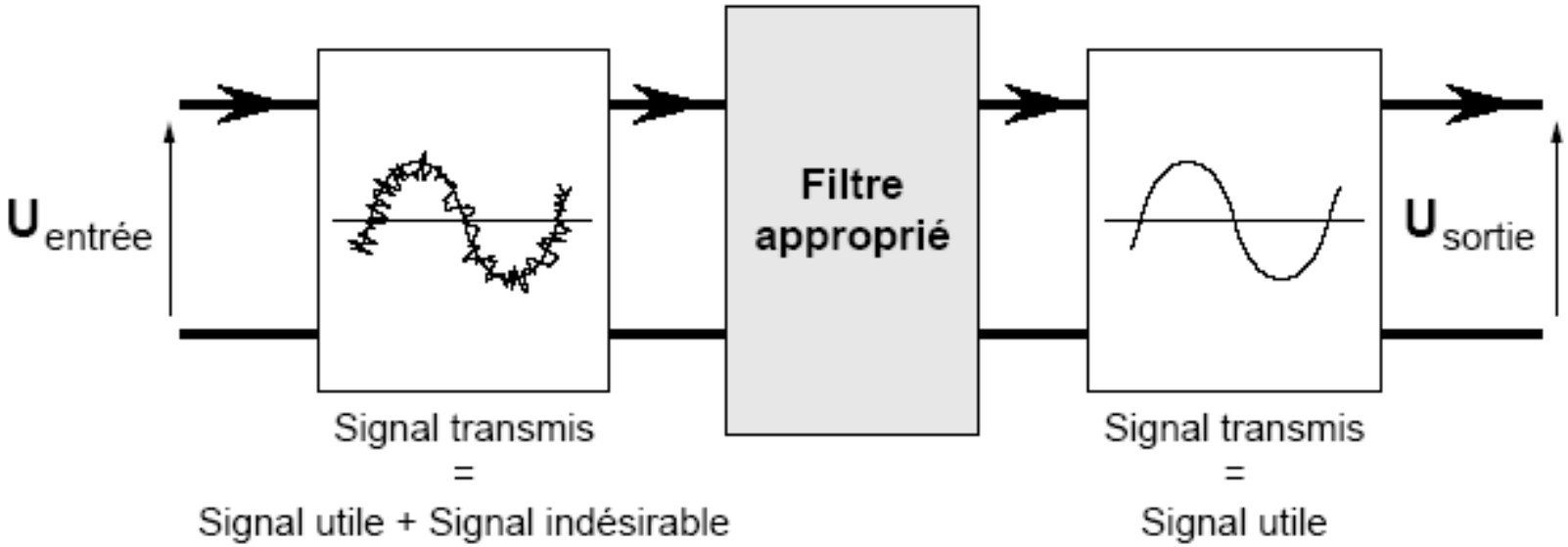

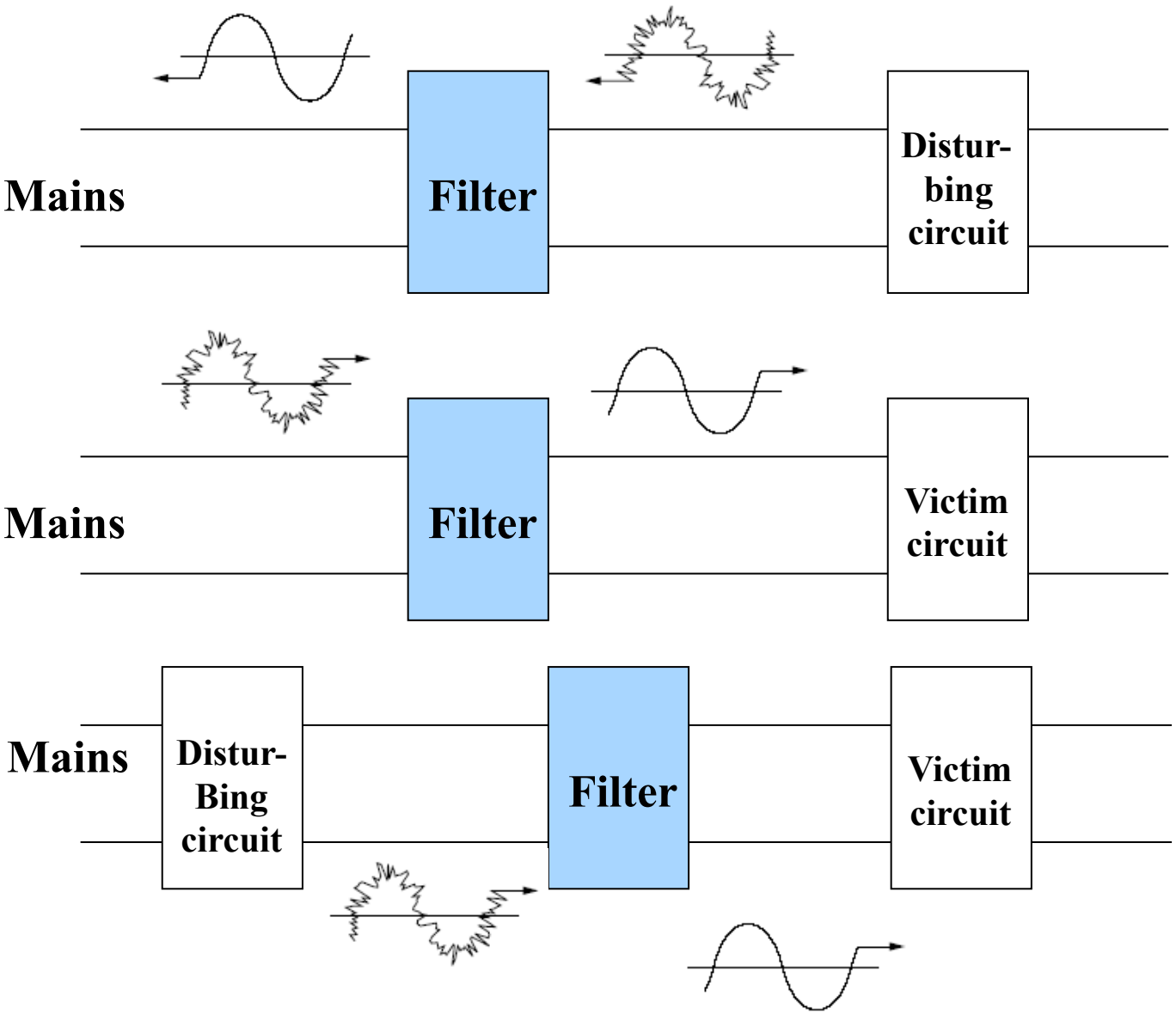

Power Lines

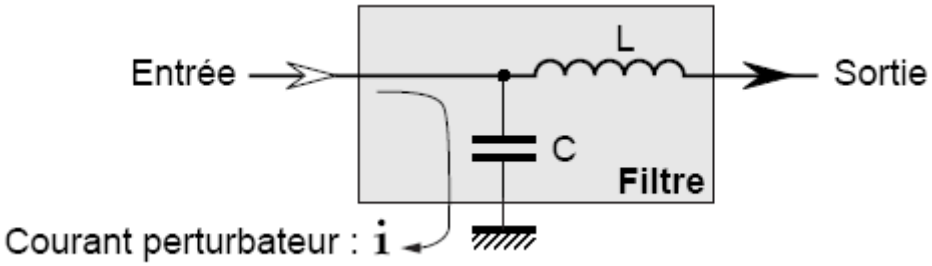

Efficient low-pass filter:

$$C \longleftrightarrow Z_s \text{ ou } Z_L >>$$
$$L \longleftrightarrow Z_s \text{ ou } Z_L <<$$

Z_{source}	Configuration du filtre	Z_{charge}
Faible	$n = 1$ (20 dB / décade) $n = 3$ (60 dB / décade)	Faible
Faible	$n = 2$ (40 dB / décade) $n = 4$ (80 dB / décade)	Élevée
Élevée	$n = 1$ (20 dB / décade) $n = 3$ (60 dB / décade)	Élevée
Élevée	$n = 2$ (40 dB / décade) $n = 4$ (80 dB / décade)	Faible

Ideal model (no parasitic components)

ⓘ Data sheet
For Z = 50Ω

Le filtrage passif «en mode différentiel»

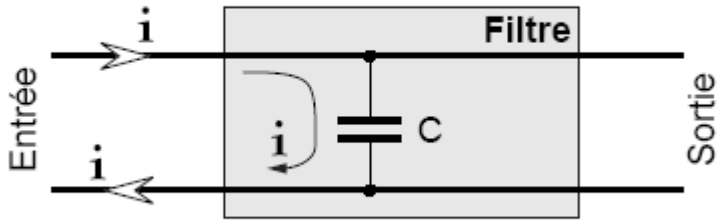

Courant perturbateur de mode différentiel

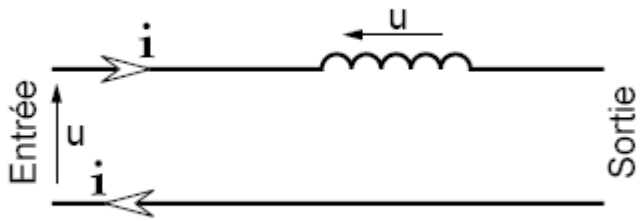

Le filtrage passif «en mode commun»

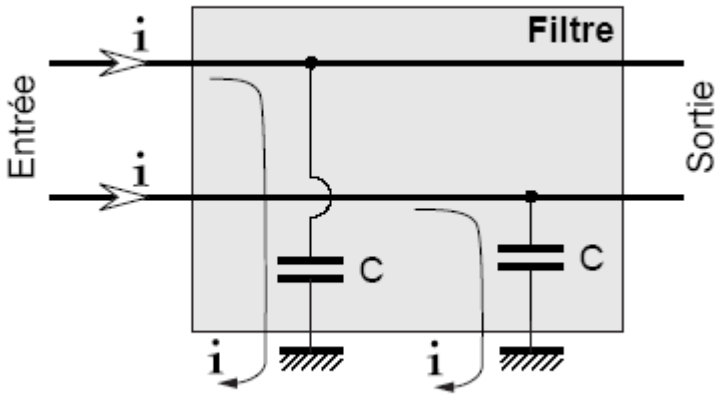

Courant perturbateur de mode commun

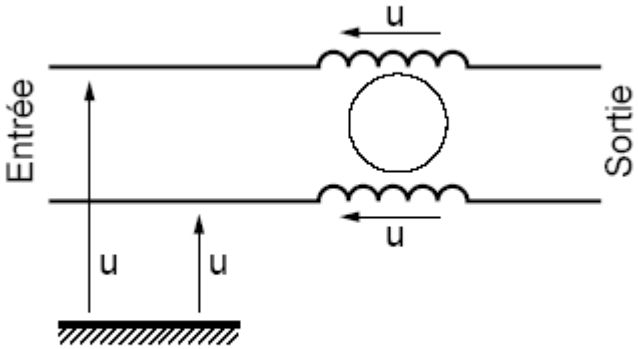

En mode différentiel, les 2 selfs s'annulent car elles sont bobinées en sens inverse sur le même noyau.

A correct implementation is mandatory

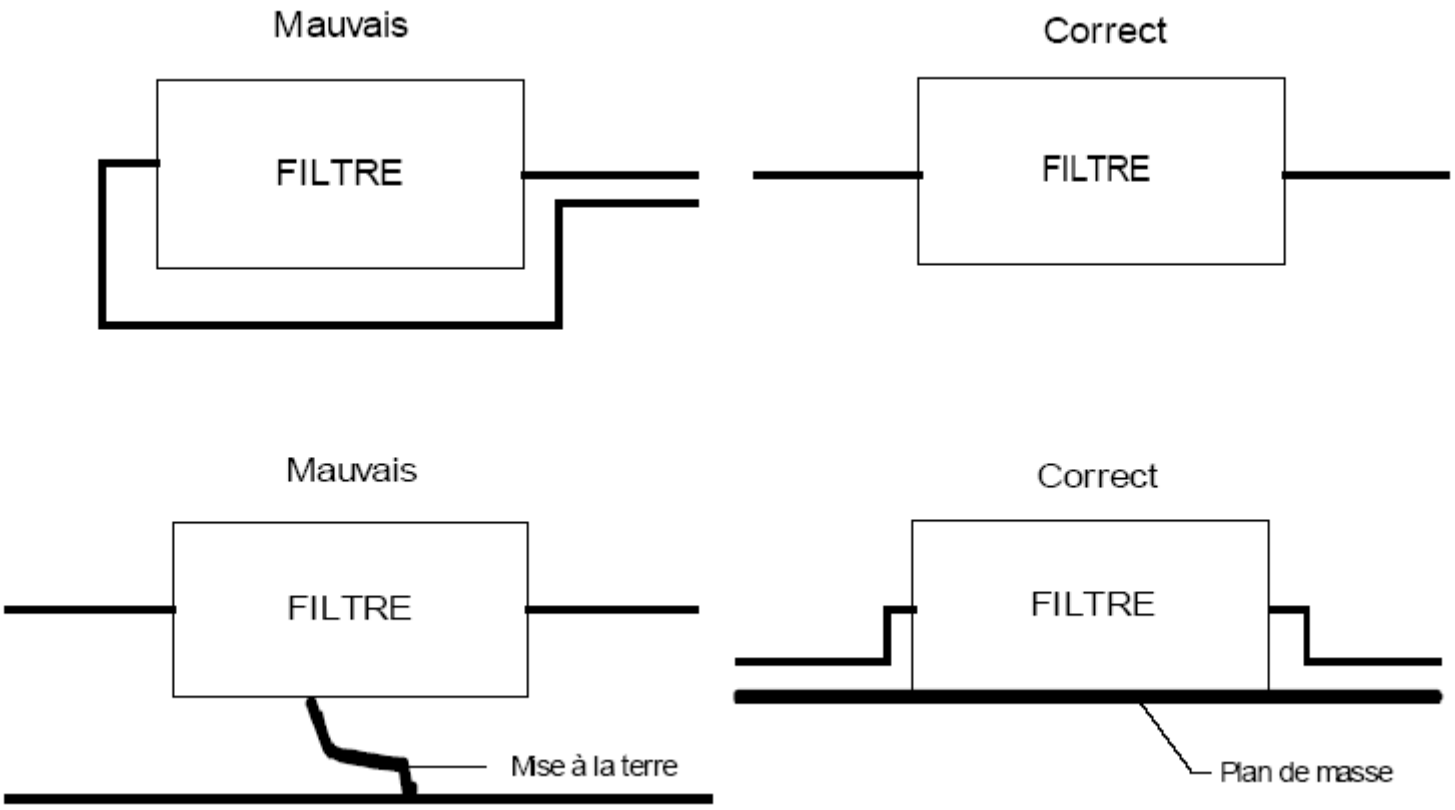

[EN 50174-2]

A correct implementation is mandatory

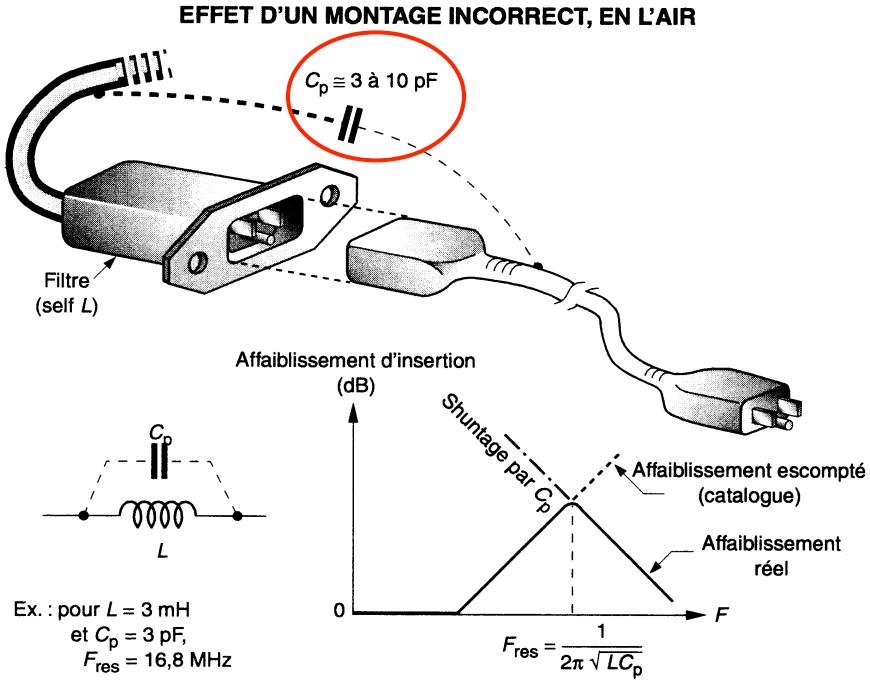

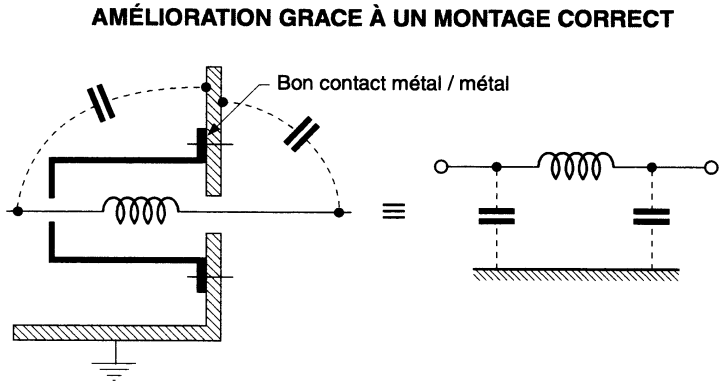

Isolation transformers

- to allow changing earthing system (IT, TN…)
- to insure a good galvanic isolation in LF

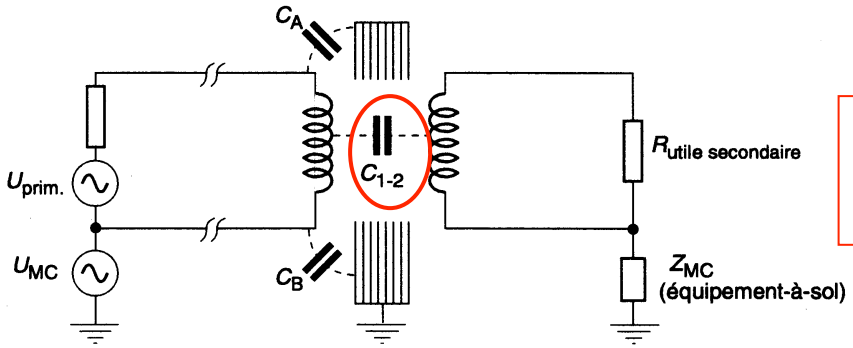

Transformateur ordinaire

C_{12} = 50 pF for 100VA
some nF for some kVA

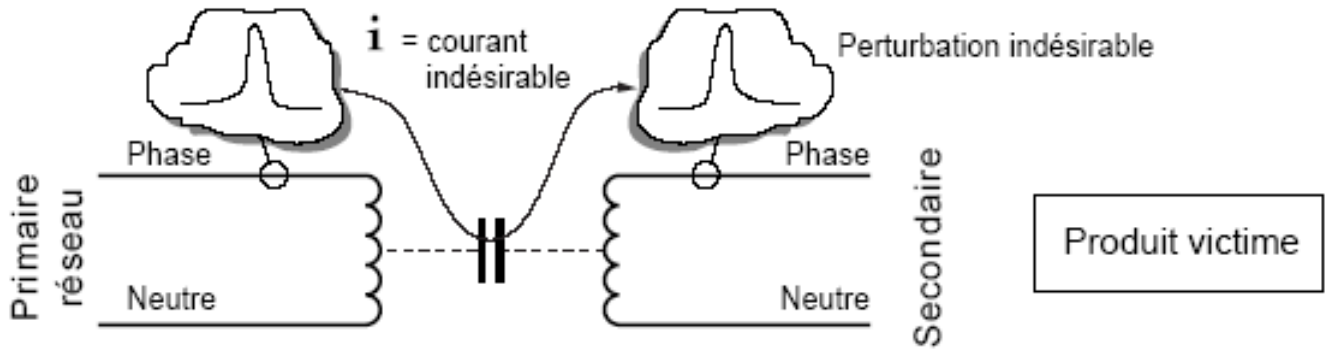

Isolation transformers

Transformateur	Représentation	Isolement	
		BF	HF
Standard	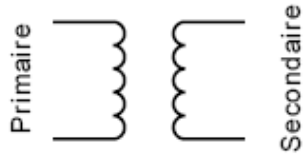	OK	Inefficace
Simple écran	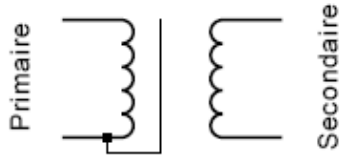	OK	Moyen
Double écran	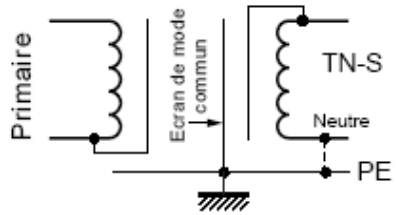	OK	Bien

$C_{12} <$ qq pF

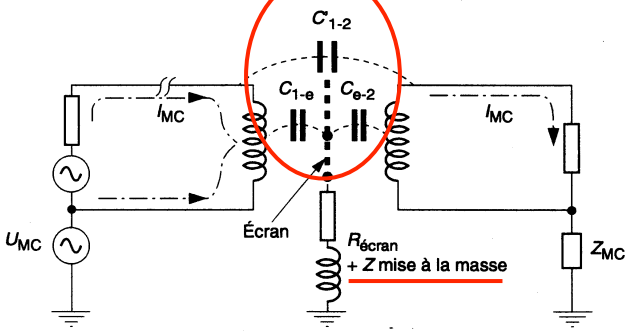

Transformateur à écran

Isolation transformers

A correct implementation is mandatory

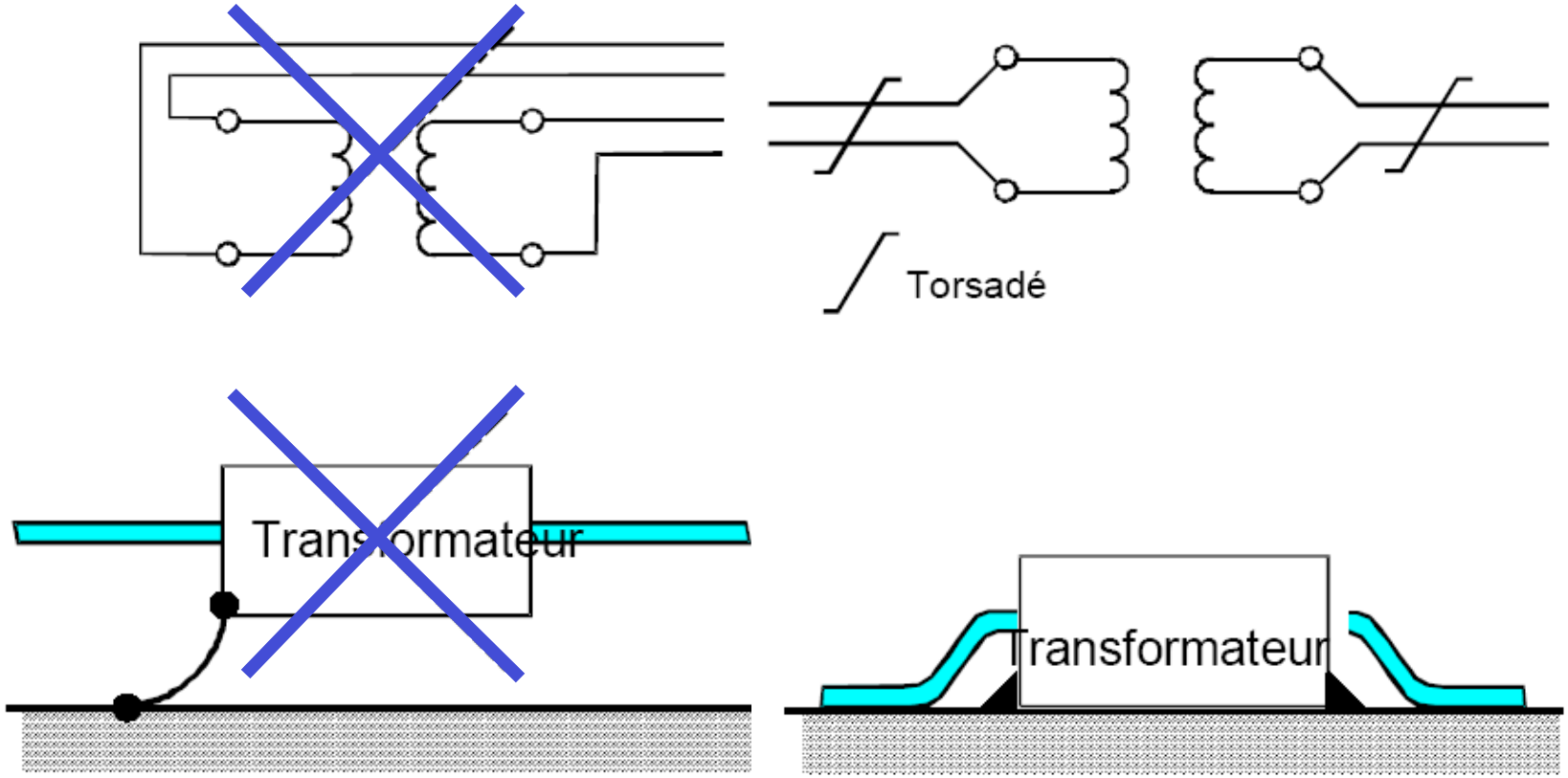

[EN 50174-2]

Components for transients

Different kinds of components are used for the protection against overvoltages.

1. Spark gap ("*éclateurs*")
2. Varistors
3. Semi-conductor components

Components for transients

Ideal protection criteria?

In the presence of a disturbance, the ideal protection component should limit immediately the voltage to a level lower than the lower value of the maximum acceptable voltage for the circuit.

Regarding consumption, it should consume:

- The minimum of energy during permanent regime
- The maximum of energy during disturbance

Protections in series or in parallel: check the defect mode of the component (open circuit or short circuit).

Components for transients
Spark gap

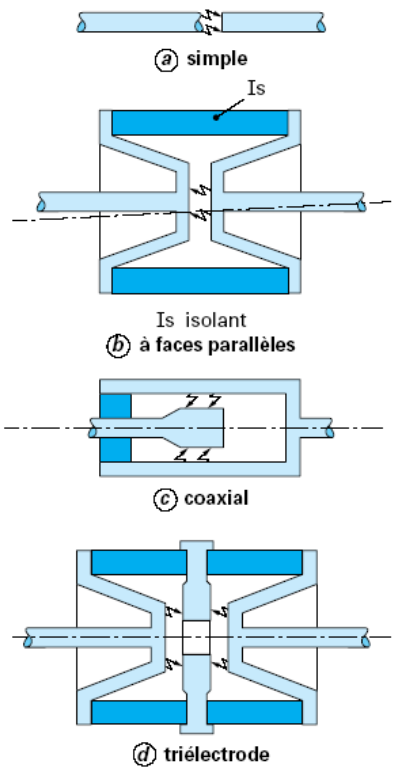

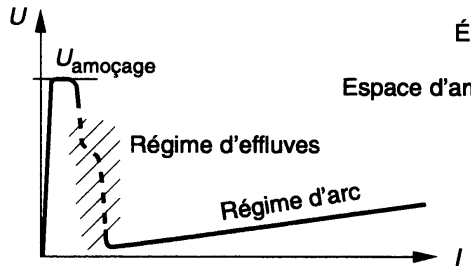

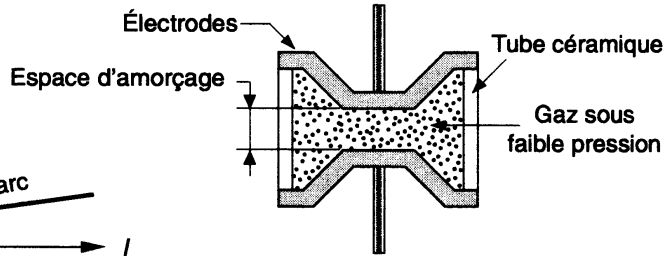

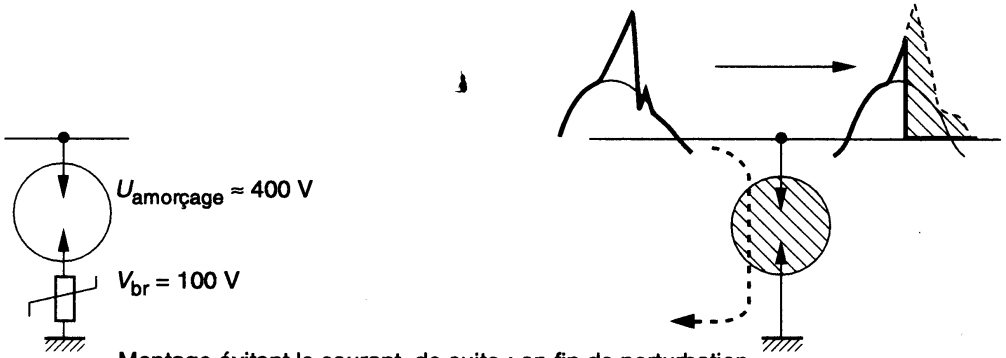

Montage évitant le courant de suite : en fin de perturbation, la tension V_{br} de la varistance empêche le maintien de l'arc.

Components for transients
Spark gap

Main characteristics:

- Very low residual voltage (+)
- Very low parasitic capacitor (+)
- Very high flowing capacity (+)
- Sparking time is related to gas ionisation (-)

Criteria:

- sparking voltage > maximum voltage of circuit (x 1.5)
- maximum sparking current < destruction value
- lifetime

Components for transients

Varistors (*varistances*)

This is a component with a resistance varying according to the reverse of applied voltage

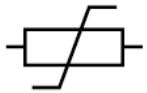

$$J = KV^{\alpha}$$

Varistors ZnO prepared by sintering (*frittage*) of different oxydes (chemical mixture and thermal treatment are very important).

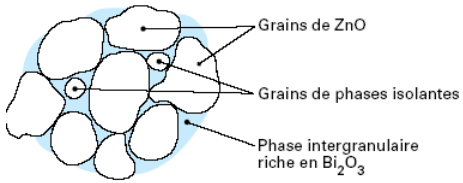

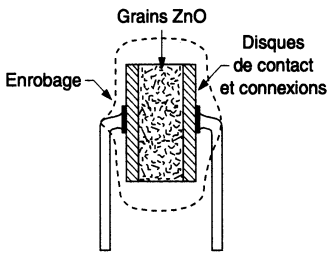

Criteria:

- Calculation of dissipation energy
- Stability of characteristics (dc, ac and pulse)

Components for transients

Varistors (*varistances*)

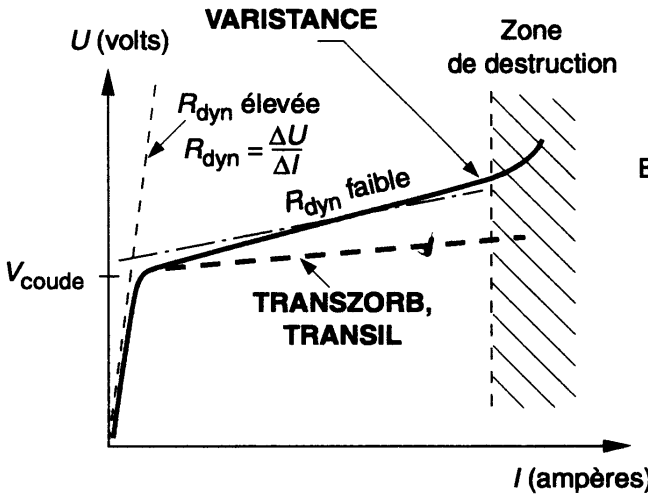

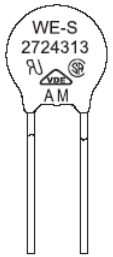

Advantages:

- moderate cost
- small response time (< 50 ns)
- different values of knee voltage available.

Drawbacks:

- slope I-U is soft
- high parasitic capacitor
  (not efficient for quick signals)
- slow destruction by fatigue, carbonisation risk and burst

Components for transients

Semi-conductors

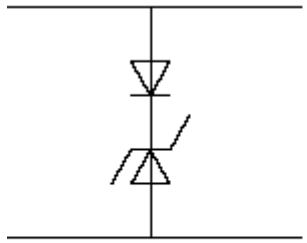

- diodes inversely polarised (Zener and avalanche)
- thyristor effect component
- « surge suppressor » group of components, integrated on the silicium level.

Characteristics:

Easy to use (+), economic (+), very quick (+), nearly perfect characteristics (+), steady voltage in conduction regime (+), limited absorption energy capacity (-), end of life as short-circuit (-).

Dispositif	Tension de service du circuit protégé (V)	Temps de réponse (ns)	Possibilité d'absorption d'énergie (J)	Capacité (pF)	Courant de fuite au repos (A)	Gamme de température d'utilisation (°C)
Diode *en direct* (§ 2.1)	0,5 à 10	très rapide < 1	faible 10^{-2} à 1	faible 10 à 100	important 10^{-6} à 10^{-3}	– 40 à + 85
Diodes Zener et à avalanche (§ 2.2.2)	5 à 200	très rapide < 0,1	faible 10^{-2} à 1	élevée 10^{3} à 10^{4}	important 10^{-6} à 10^{-3}	– 65 à + 125
Dispositif à effet thyristor (§ 2.3)	75 à 300	10 à 50 (fonction de d*v*/d*t*)	bonne quelques joules	moyenne 10 à 300	faible 10^{-5}	limitée – 40 à + 85
Varistances (ZnO) (§ 3.3)	5,5 à 5 000	⩽ 1	très bonne 10 à 10^{4}	moyenne 10^{2} à $5 \cdot 10^{3}$	faible 10^{-7} à 10^{-6}	– 55 à + 125 (modèles standards) – 55 à + 85 (modèles de forte puissance) (limitation à haute température due au courant de fuite)
Éclateurs à gaz (§ 5)	100 à 20 000	< 1	très bonne 10^{2} à 10^{4}	très faible 1 à 10	très faible 10^{-12} à 10^{-9}	– 55 à + 125

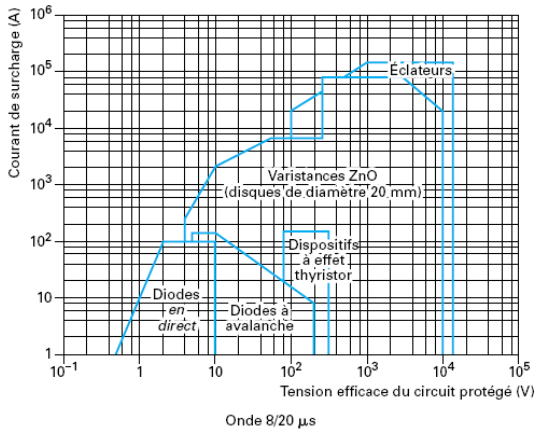

Onde 8/20 µs

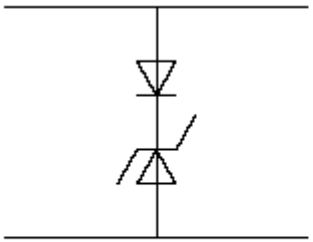

(a) montage unidirectionnel

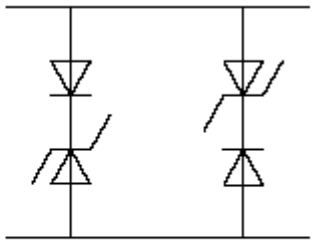

(b) montage bidirectionnel

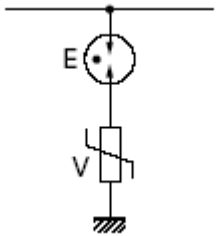

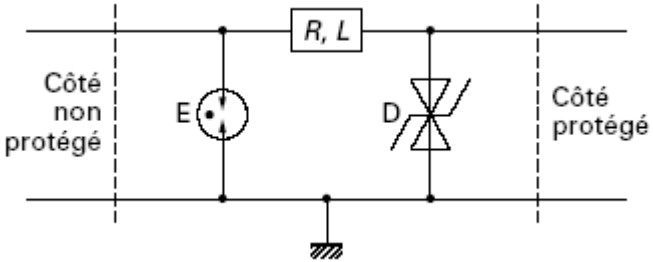

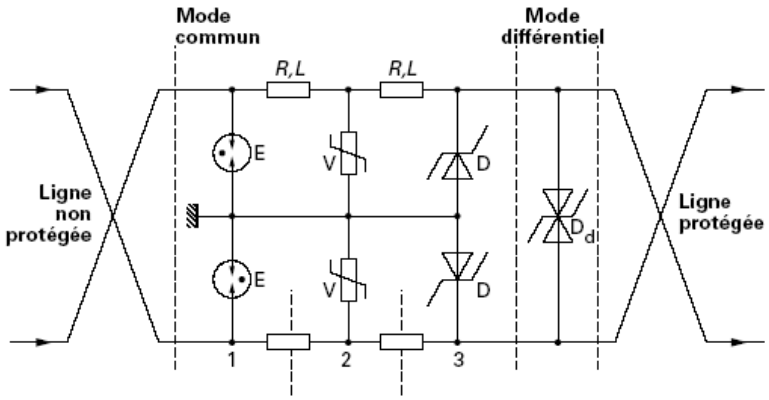

D diodes de protection
D_d diode bidirectionnelle
E éclateurs
V varistances

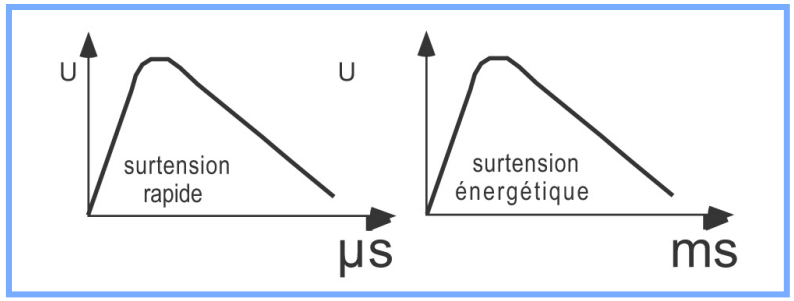

Gas tube

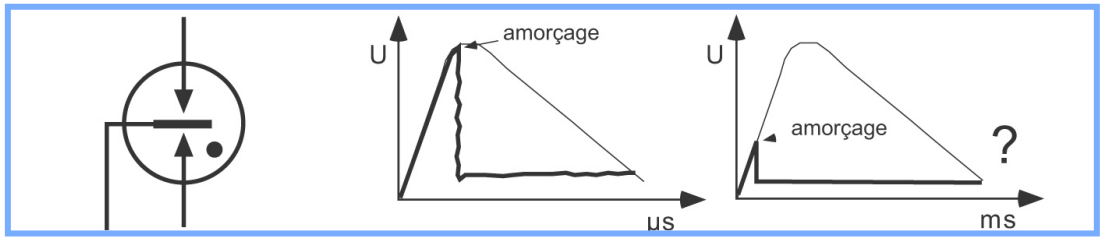

Varistor

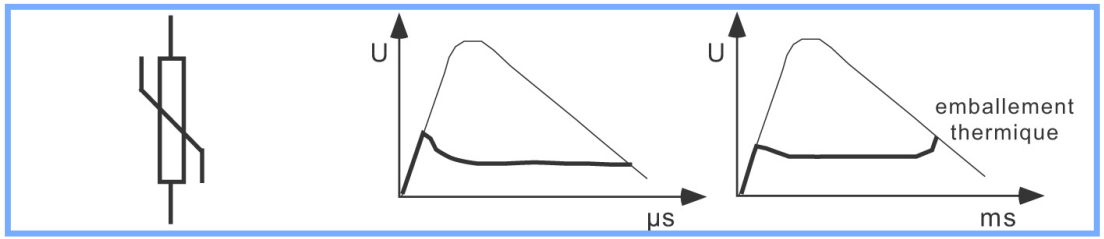

Semi-conductor

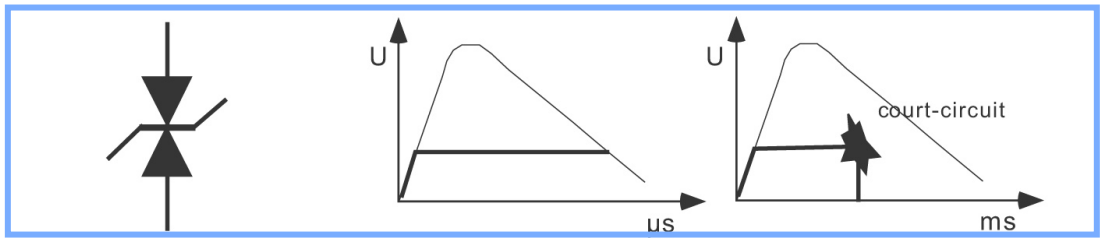

Components for transients

• In EMC efficient components are mandatory but a good implementation is also mandatory.

• Those components are efficient regarding transients, but fuses and breakers are still mandatory on the input of power circuits.

• To install components as near as possible.

• Energy to ground.

• In case of components in parallel, take care of their non linearity.

• Importance of **equipotentiality**.

Signal lines

Filters for signals

C = écoulement des courants de MC à la masse-châssis

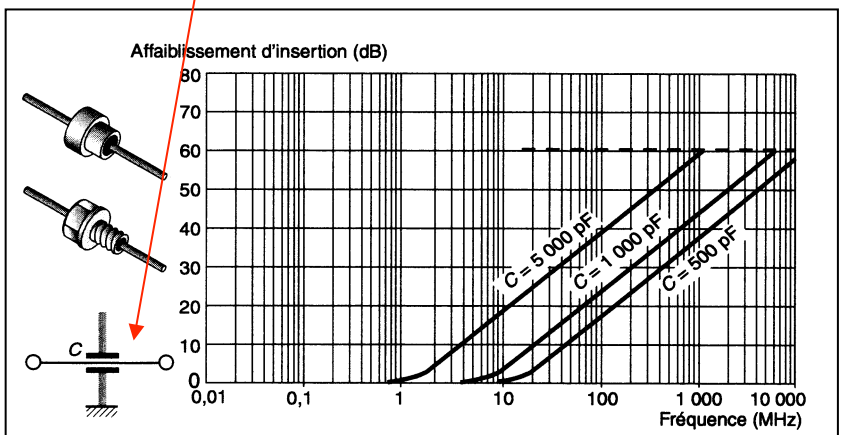

(a) Filtres capacitifs de type traversée. : l'atténuation est donnée pour un montage $R_{source} // R_{charge} = 50\ \Omega / 50\ \Omega$. Pour d'autres configurations, il faut corriger les courbes de la quantité $20 \lg \frac{R_S\ R_C}{[R_S + R_C] \times 25}$

Individual filtering for signal lines

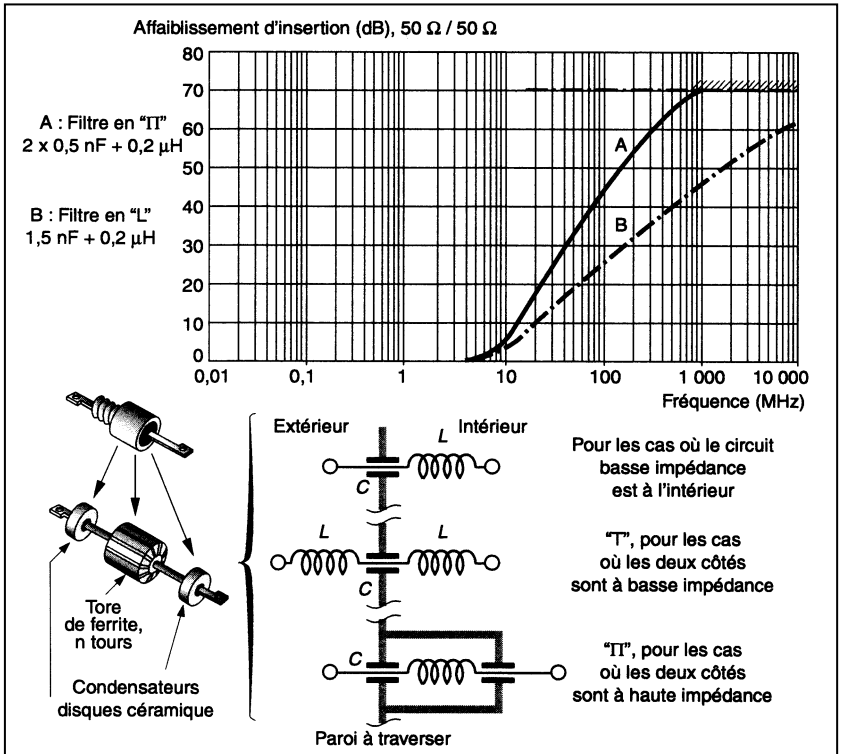

(b) Filtres de traversée à 2 ou 3 étages pour courants faibles ou moyens

Signal lines

Filters for signals

parasitic L

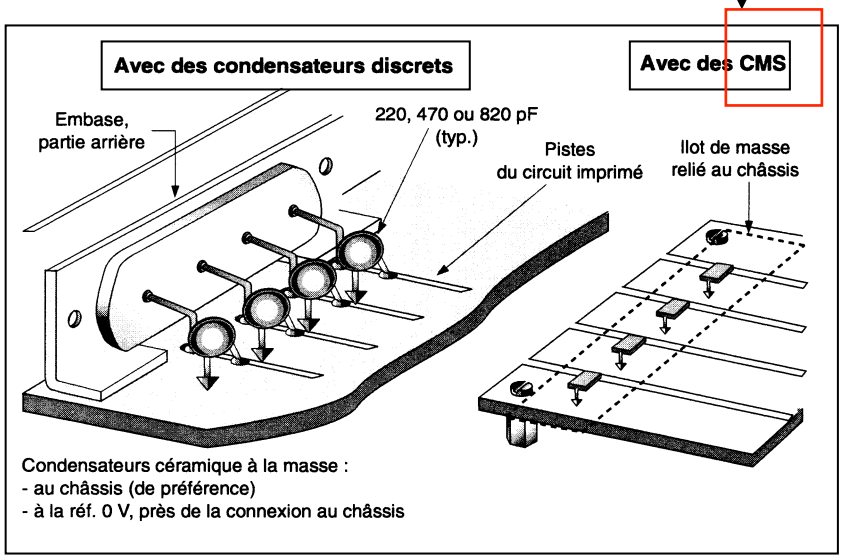

Filter I/O on printed circuit board

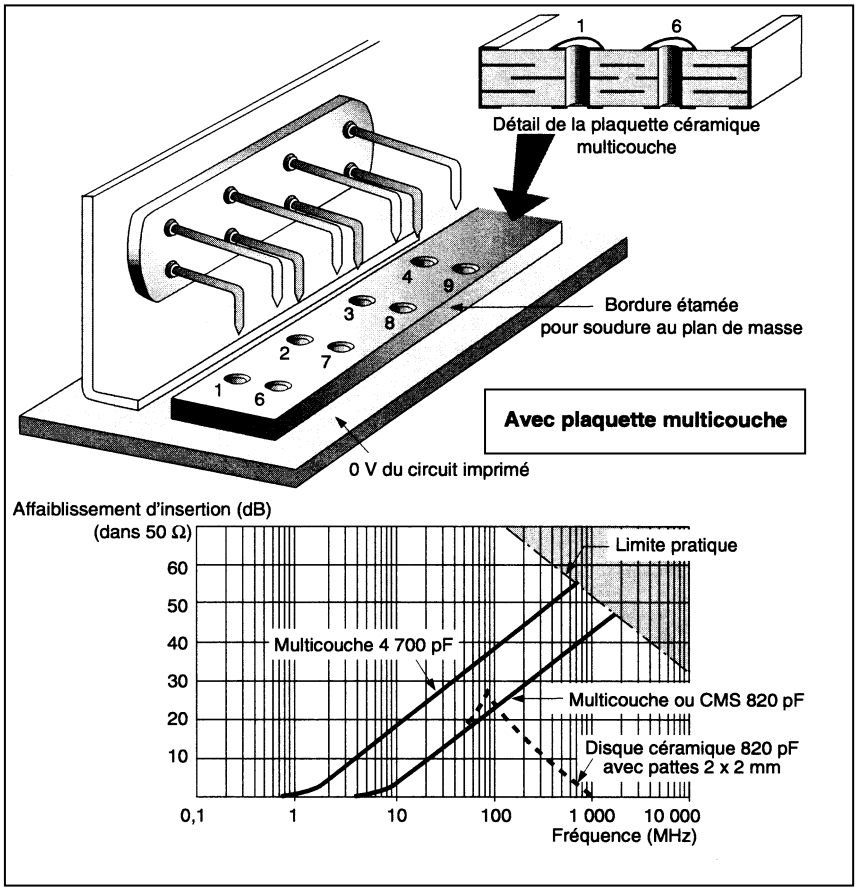

Signal lines

Filters for signals

PA4 = 400 pF min
P02 = 1 800 pF min
P04 = 4 000 pF min
P08 = 8 000 pF min
P16 = 16 000 pF min

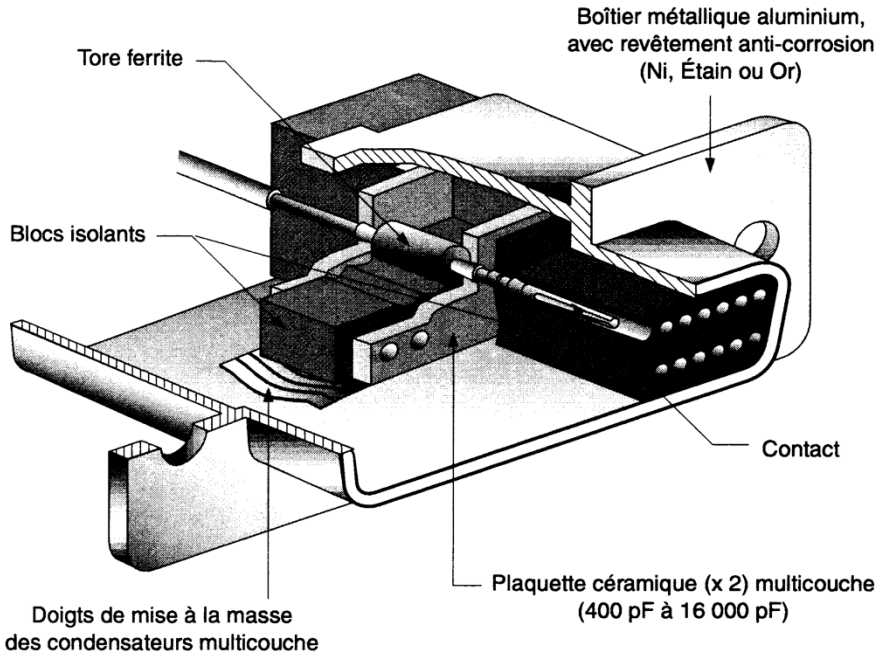

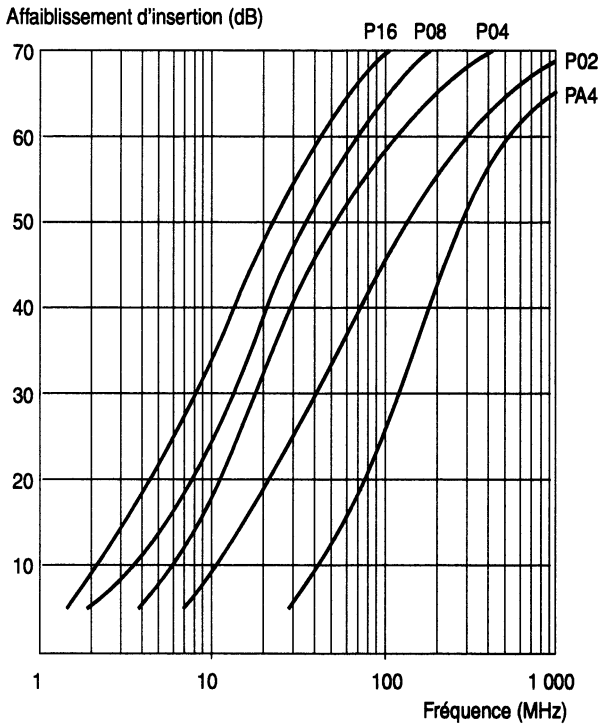

Connector-filter in Pi [Amphenol®]

Isolation transformers for signals

DM (transmitted) - CM (blocked)

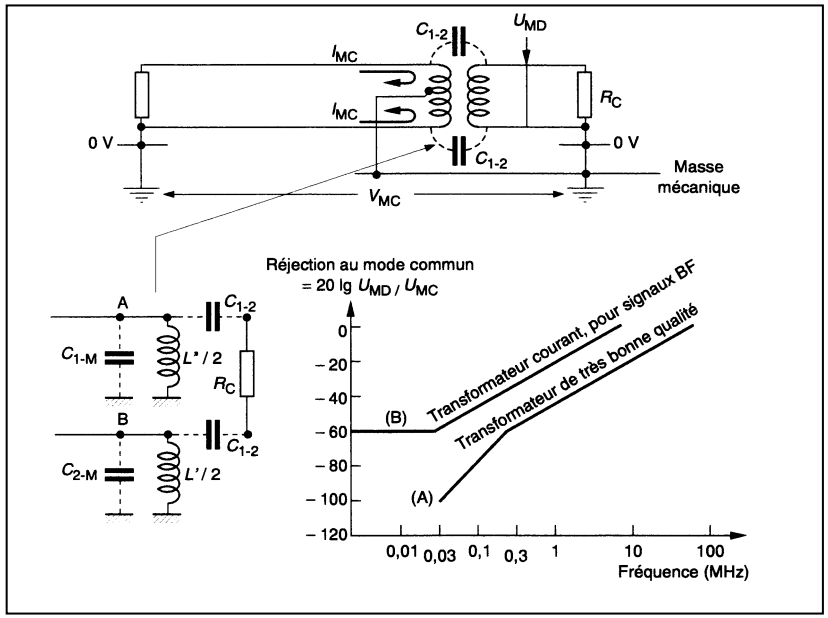

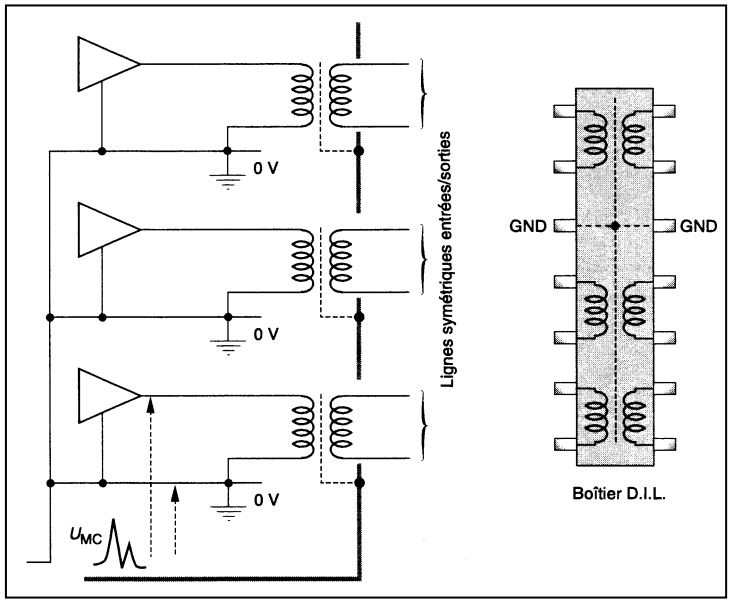

With mid-point:

- I_{MC}: OK
- galvanic insulation of ground: KO

With screen for signal bus

Signal lines

Optical couplers

By-pass C_p

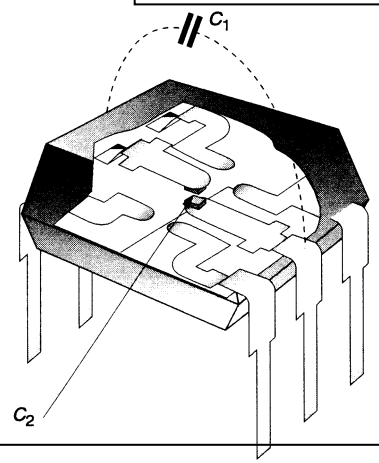

Internal C_p (between LED and photosensitive element)

L'opto-coupleur

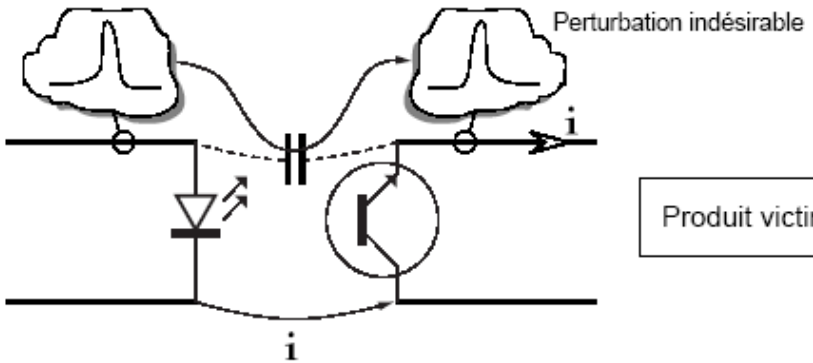

Produit victime

Optical couplers

Importance of a correct implementation

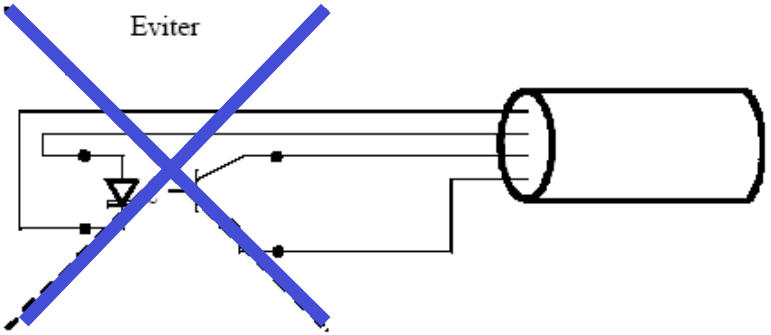

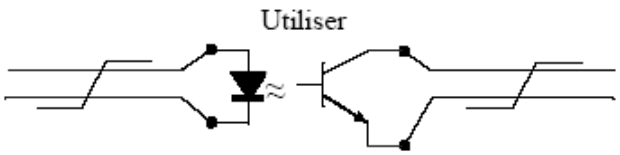

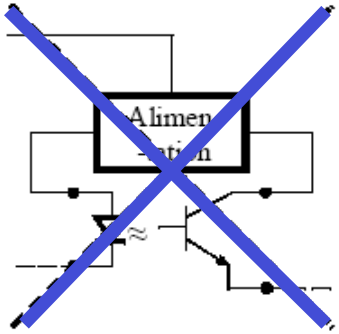

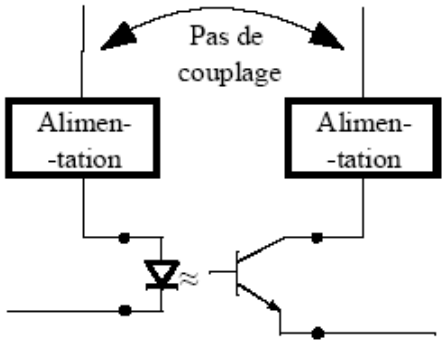

[EN 50174-2]

Power / signal lines

Baluns – CM inductances

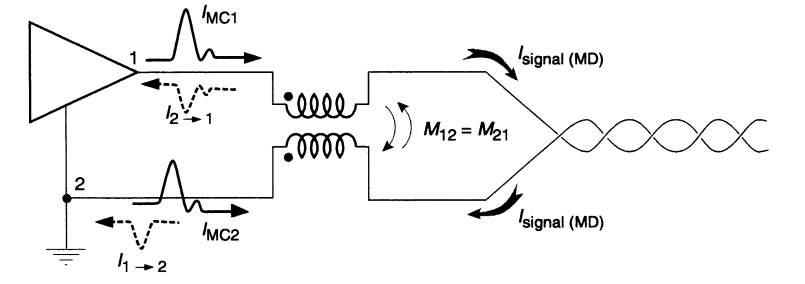

Pour les courants de mode commun (MC), chaque courant induit dans l'autre fil une tension tendant à faire circuler un courant opposé.
Par contre, les courants de mode différentiel (MD), créant des flux opposés, ne sont pas altérés.

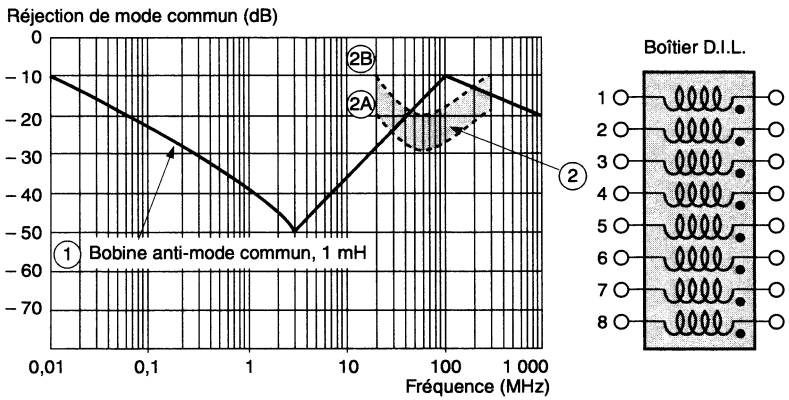

(1) Transformateur "Balun" pour applications BF.

(2) Transformateur anti-mode commun pour liaisons numériques 8 fils.
La courbe 2B correspond au plus mauvais cas : signal aller broche n° 1, retour broche n° 8.
La courbe 2A correspond au meilleur des cas : aller en n° 1, retour en n° 2.
La perte pour le signal utile est < 2 dB.

Power / signal lines

Ferrites (magnetic ceramic MFe2O4)

- Nickel
- Manganese
- Zinc
- Copper
- …

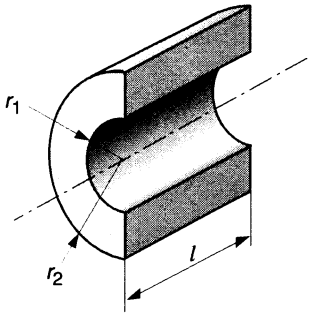

Flux dans le circuit magnétique : $\Phi_T = B \times l\,(r_2 - r_1)$

$$I_{max\ (saturation)} = \frac{B_{max}\ l\,(r_2 - r_1)}{L_{ferrite}}$$

B_{max} = 0,1 à 0,2 tesla (typ.)

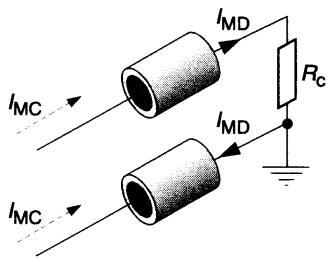

Un ferrite par fil
atténue les courants MD ***et*** MC

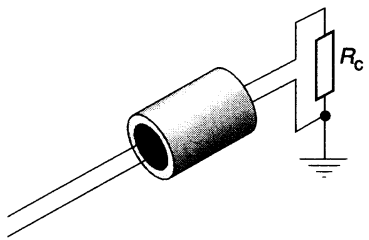

Un ferrite sur les 2 (ou 2 x *n*) fils
n'affecte que I_{MC}

Power / signal lines

Ferrites

Nickel-Zinc (NiZn) :

- low permeability
- high resistivity
- usable frequencies >10MHz & <1GHz

Manganese-Zinc (MnZn) :

- high permeability
- low resistivity
- usable frequencies <10MHz

Type	Material	μ_i	B_{sat} (mT)	T_c (°C)	ρ (Ωm)
Manganese Zinc	3E8	18000	350	100	0.1
	3E7	15000	400	130	0.1
	3E6	12000	400	130	0.1
	3E5	10000	400	120	0.5
	3E26	7000	450	155	0.5
	3E27	6000	400	150	0.5
	3C11	4300	400	125	1
	3S1	4000	400	125	1
	3C90	2300	450	220	5
	3S4	1700	350	110	10^3
	3B1	900	400	150	0.2
	3S3	250	350	200	10^4
Nickel Zinc	4A15	1200	350	125	10^5
	4S2	700	350	125	10^5
	4B1	250	350	250	10^5
	4C65	125	350	350	10^5
Iron Powder	2P90	90	1600	140 *	low

Power / signal lines

Ferrites

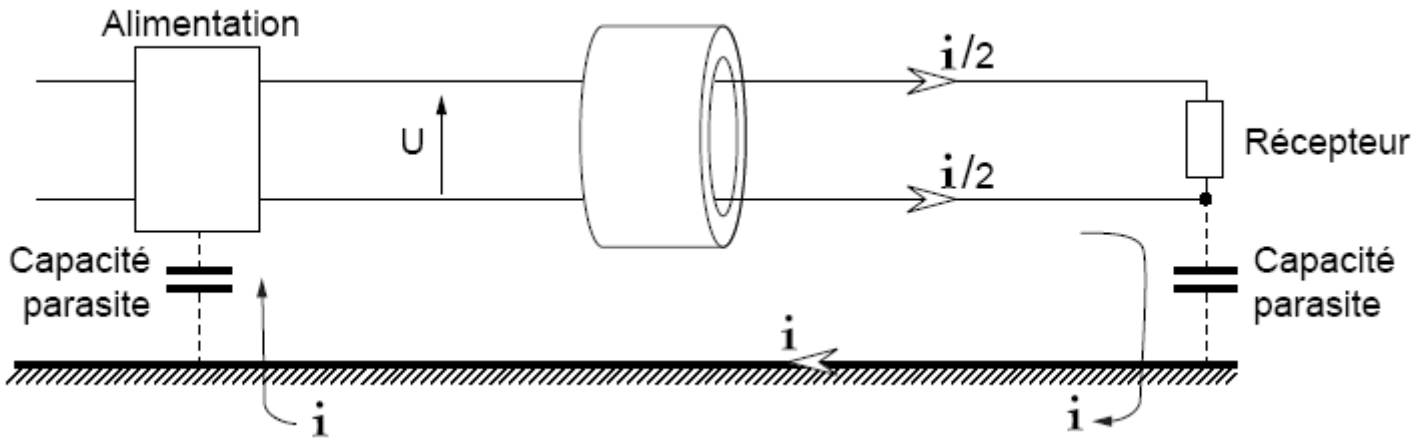

Ferrites

Equivalent circuit

$$Z = j\omega L_S + R_S = j\omega L_0(\mu_S' - j\mu_S'')$$

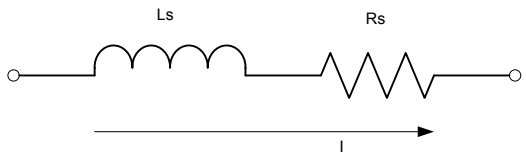

with

$$\omega L_S = \omega L_0 \mu_S'$$

$$L R_S = \omega L_0 \mu_S''$$

$$L_0 = \frac{4\pi N^2 10^{-9}}{C_1}$$

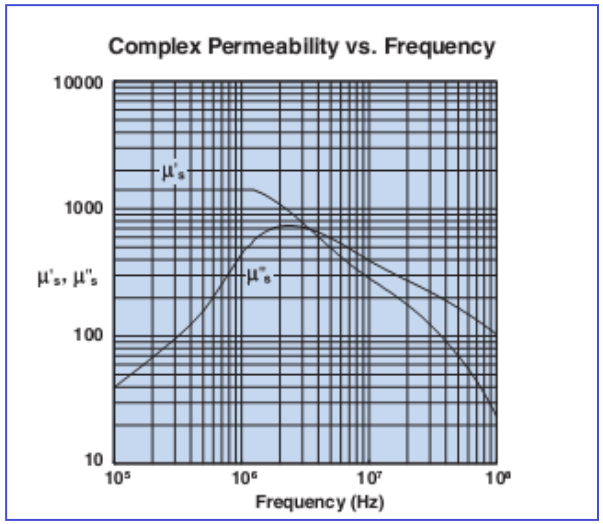

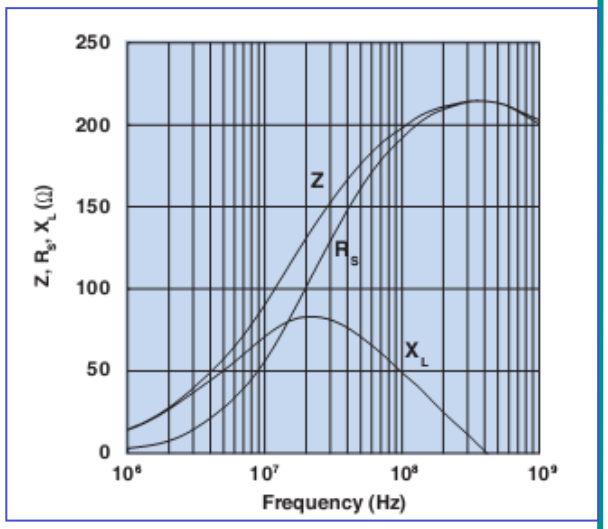

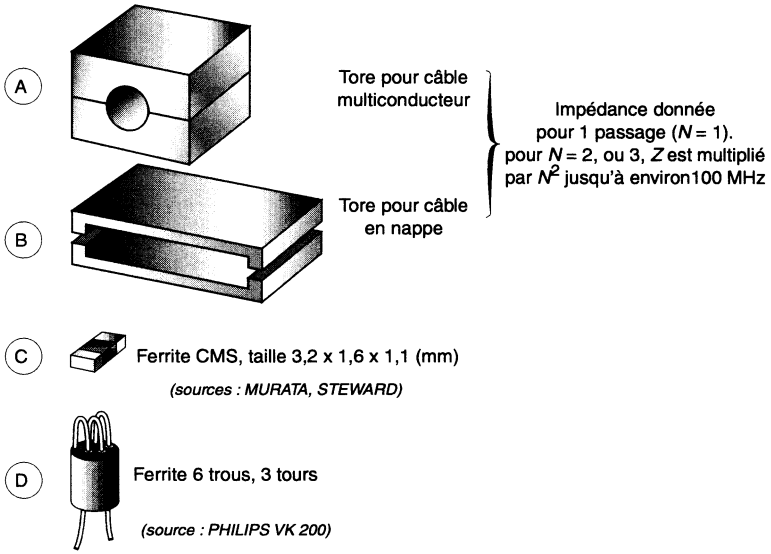

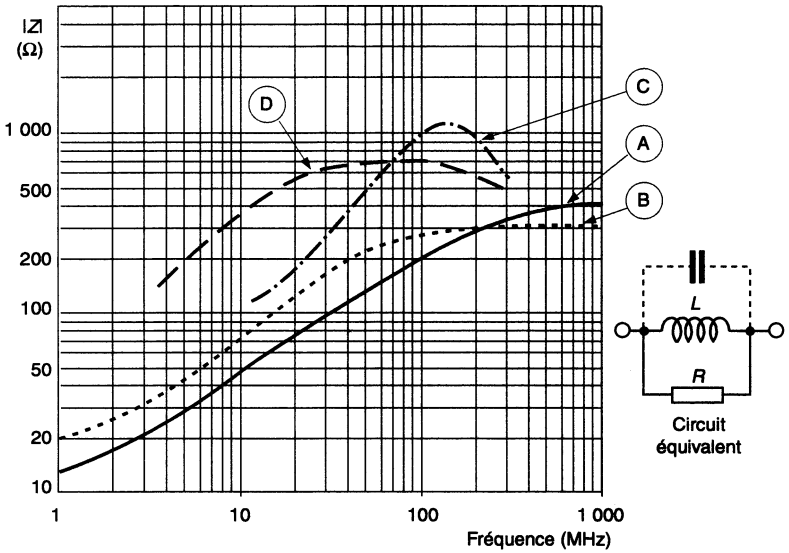

Ferrite core = localised effect
Distributed effect?

Power / signal lines

Lossy cables

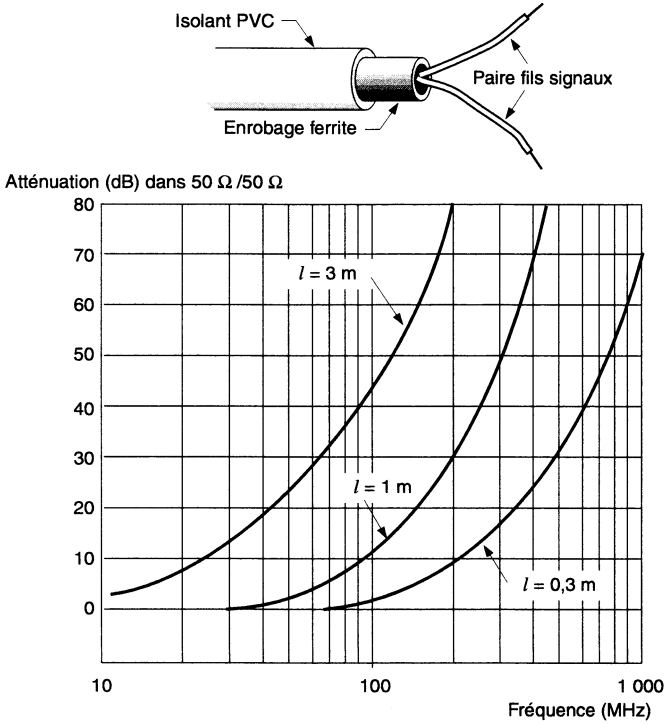

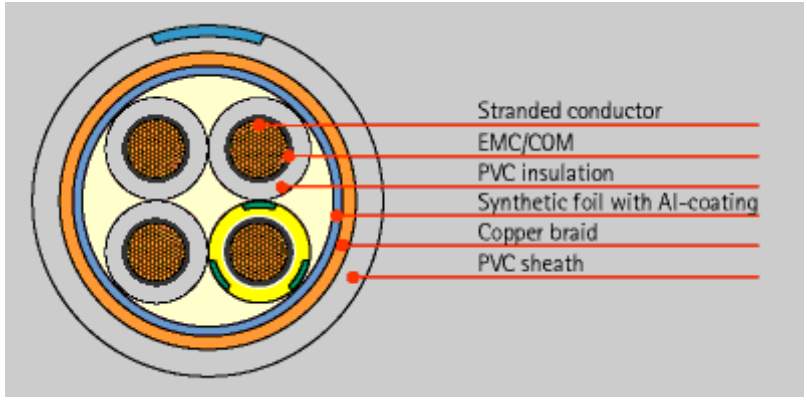

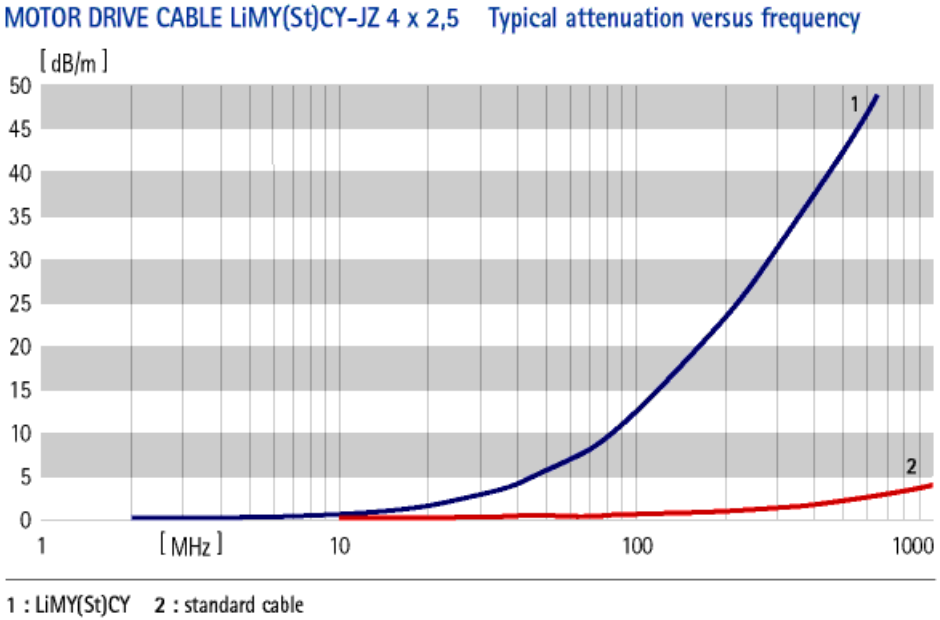

Power / signal lines

Lossy cables

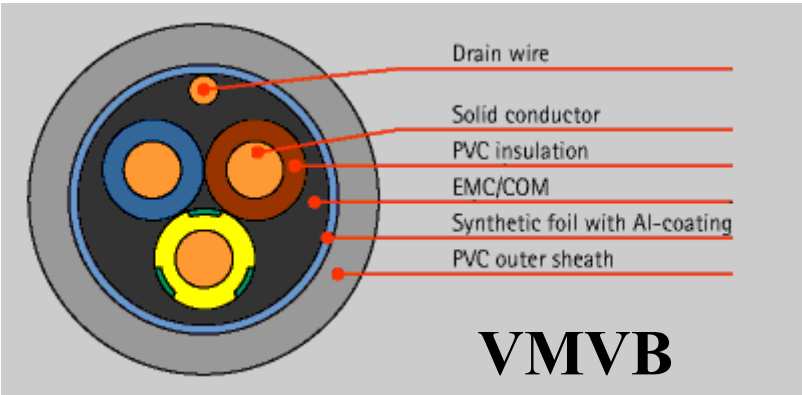

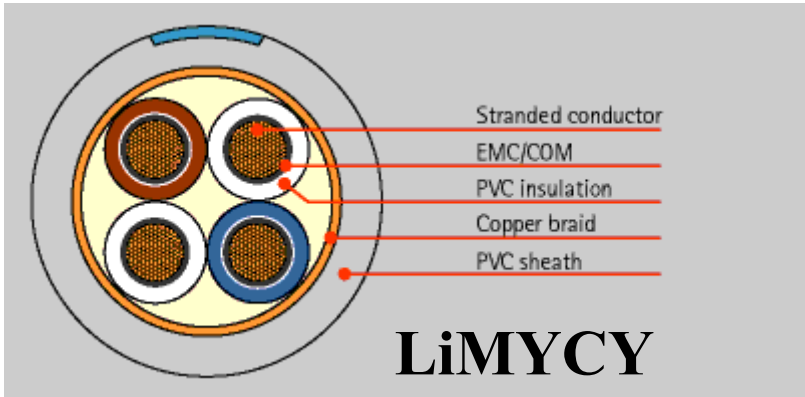

VMVB Installation Cable Common Mode Attenuation in dB/m

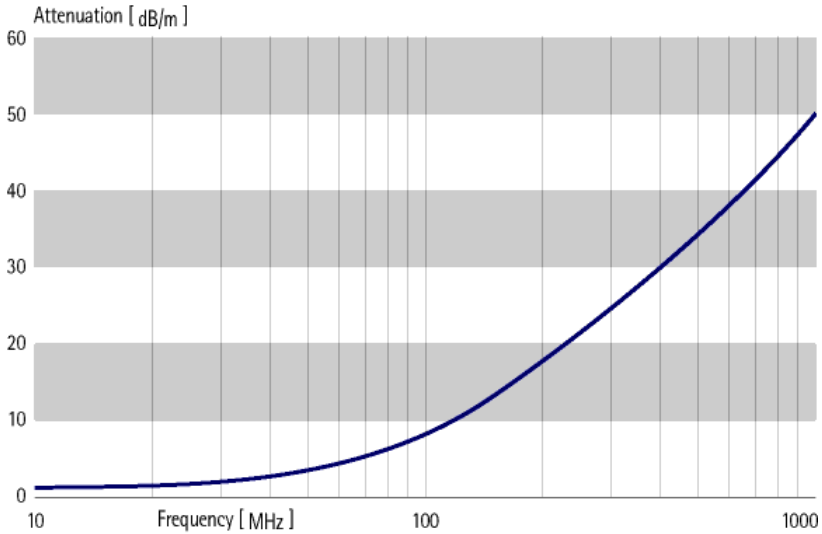

LP/CABLE LiMYCY Typical attenuation of both common and differential mode disturbances versus frequency – all types

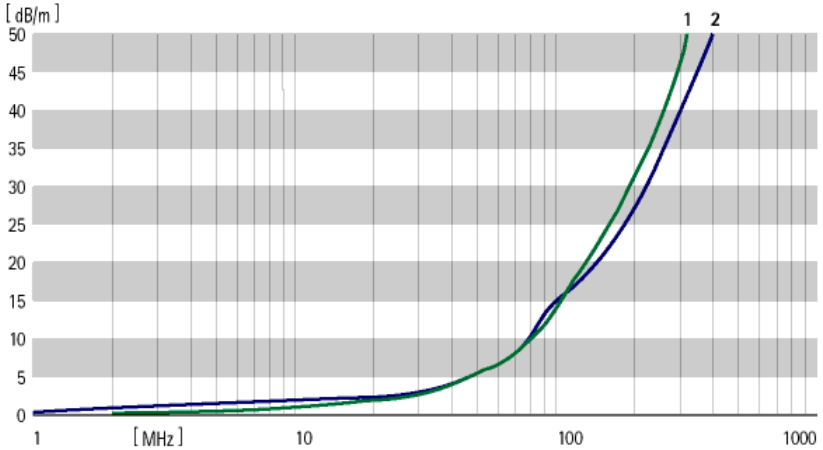

1 : Common Mode attenuation 2 : Differential Mode attenuation

Twisted cables

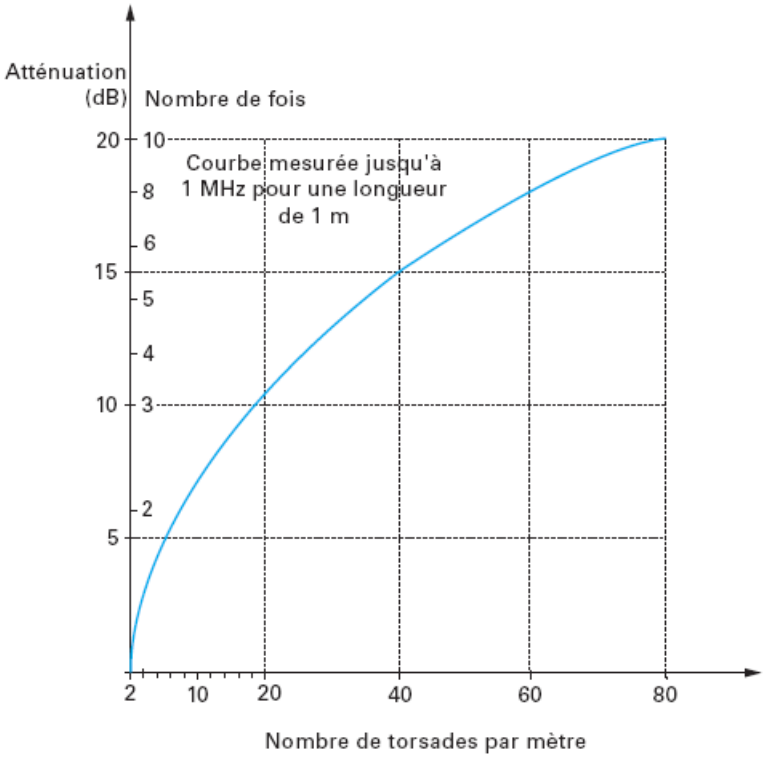

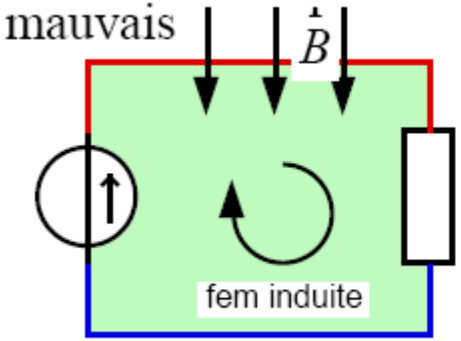

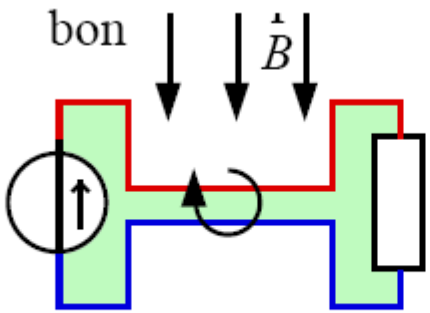

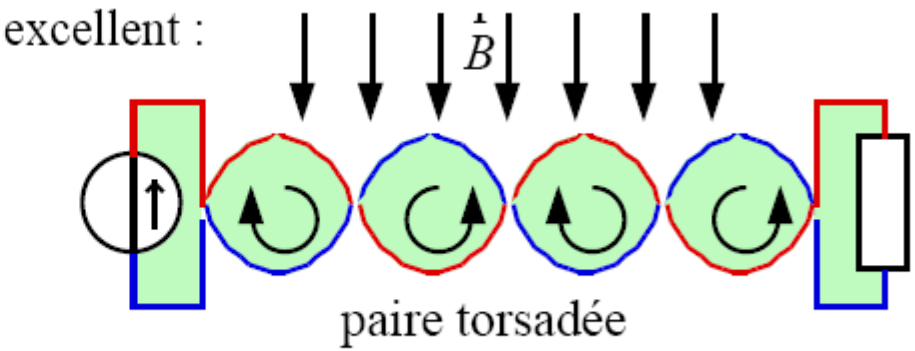

(NB : les torsades sont grossies pour les besoins du schéma)

Shielded cables

A shielded cable is characterised by its transfer impedance Zt.
Lets consider a coaxial cable over a conductive plane (figure). We connect at one end between shielding and ground plane a source E_0 with an internal impedance Z_0. At the other end, the shielding is connected to the ground plane with a short-circuit. I_0 is the induced current in the shielding. The central conductor is open at one end and short-circuit at the other end. V_{int} is the image of the shielding defects (I_0 on the shielding).

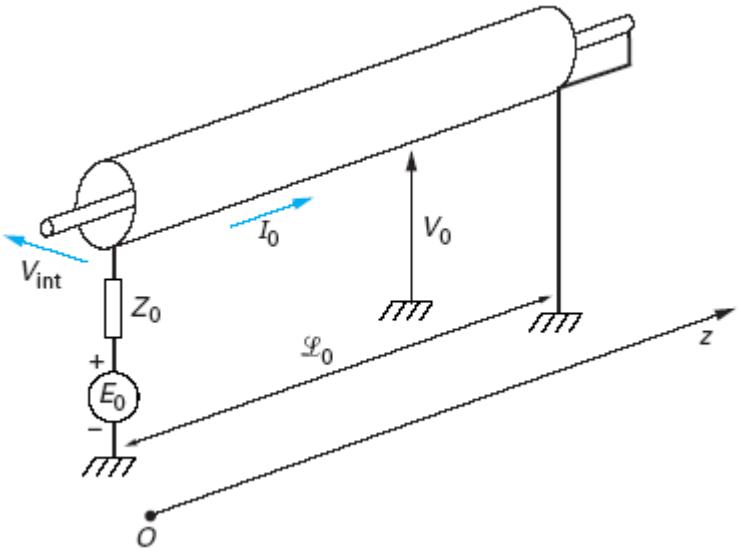

Zt is V_{int} over I_0, in Ω/m.
Zt is a function of physical characteristics and geometry
- homogeneous tubular shielding
- braided shielding
- helicoidally shielded

Shielded cables

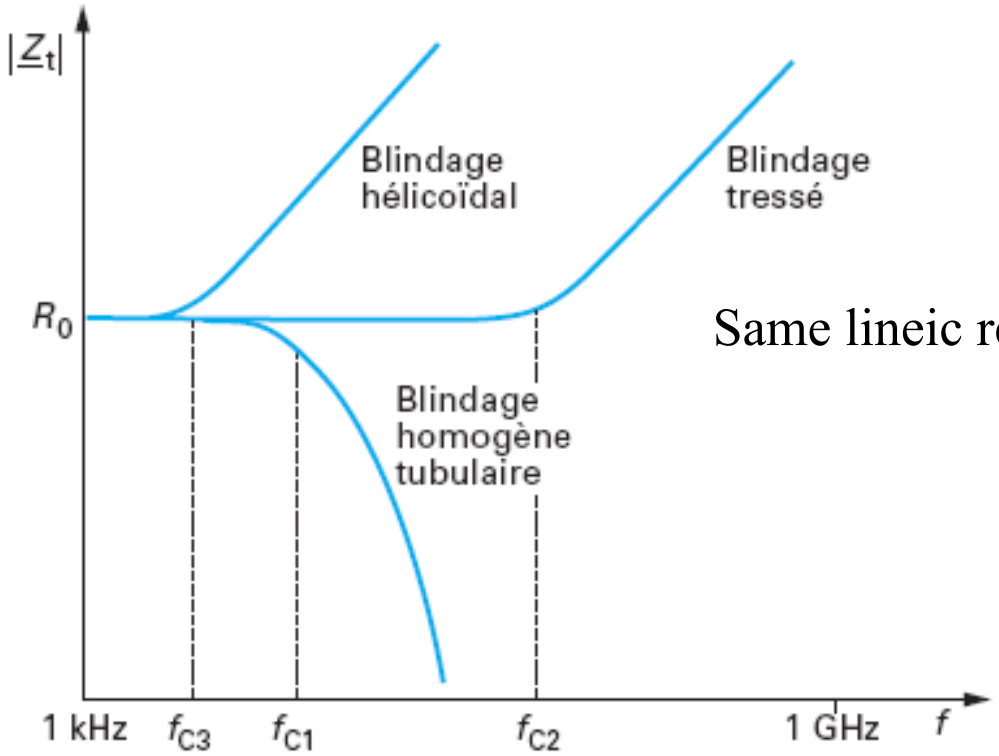

Same lineic resistance 6mΩ/m (typ.)

Do not confuse metalic armature (mechanical) and shielding.

Shielded cables

Multi-pair cable
Double shielding
with aluminium sheet and
tinned braid

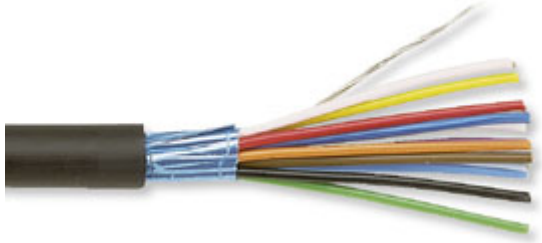

Multiconductor cable
aluminium shielding

Multi-pair cable
Shielding for each pair
and general shielding
(tinned copper braid)

Multiconductor cable
+ shielding
(tinned copper braid)

Shielded cables

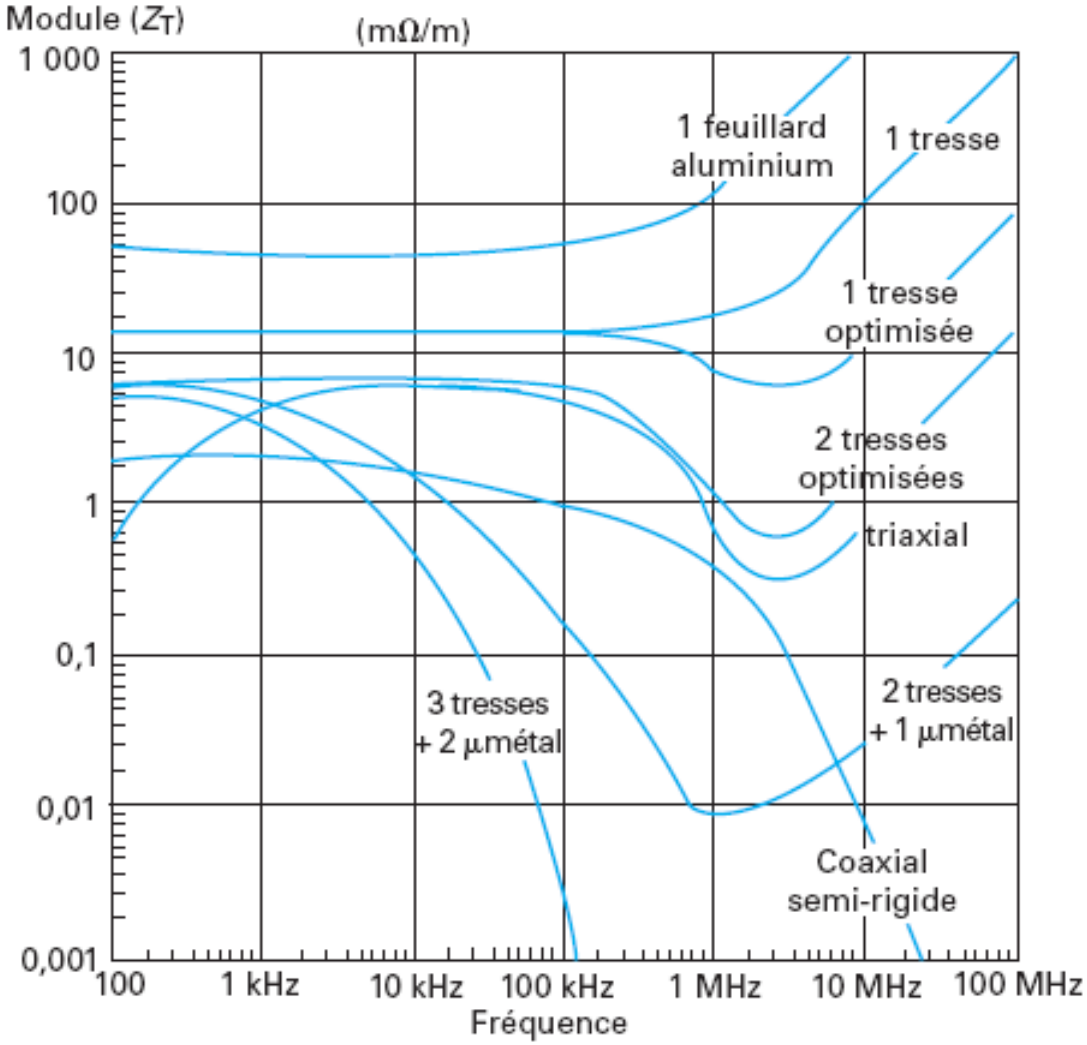

Shielded cables

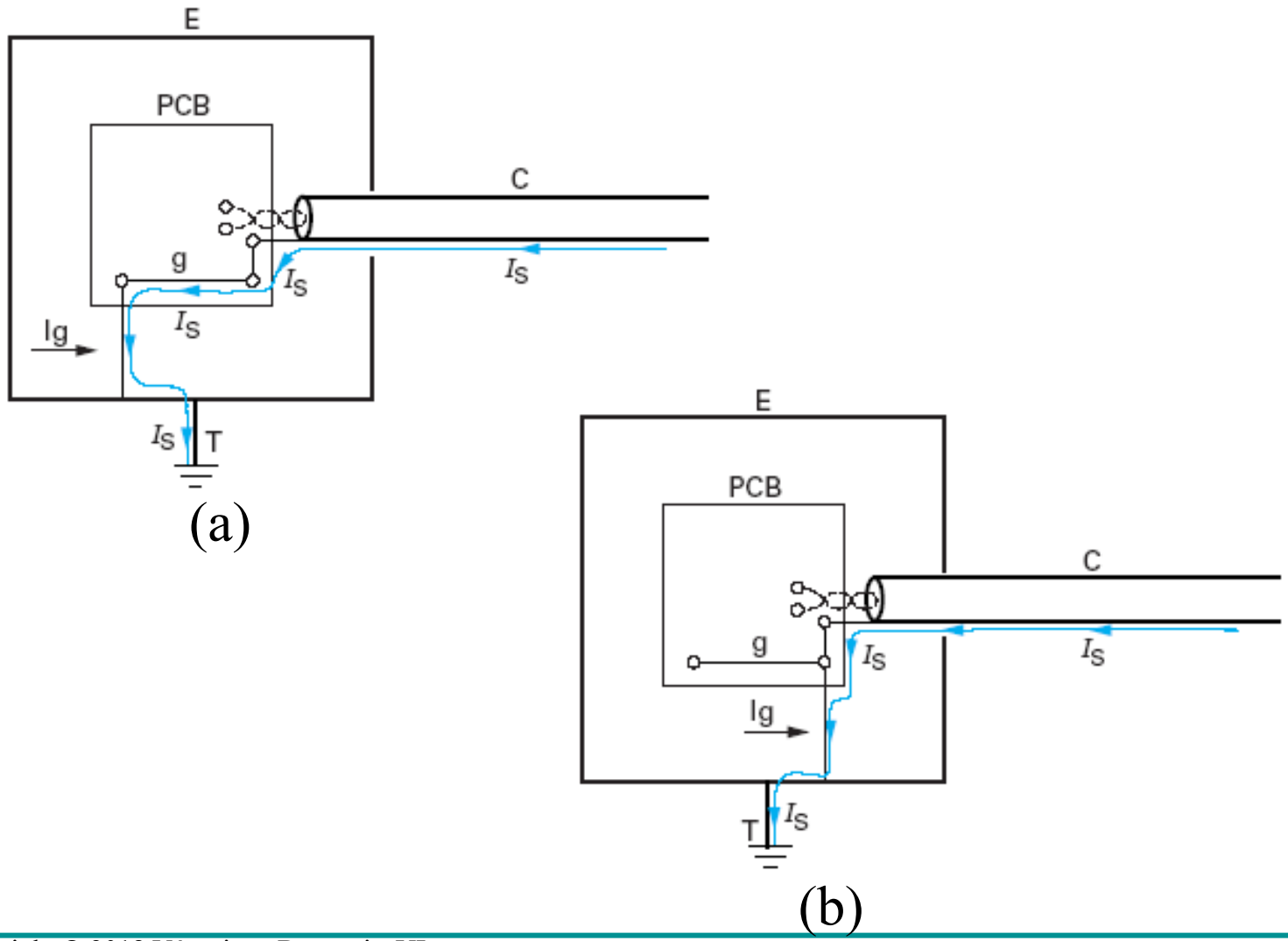

Shielded cables

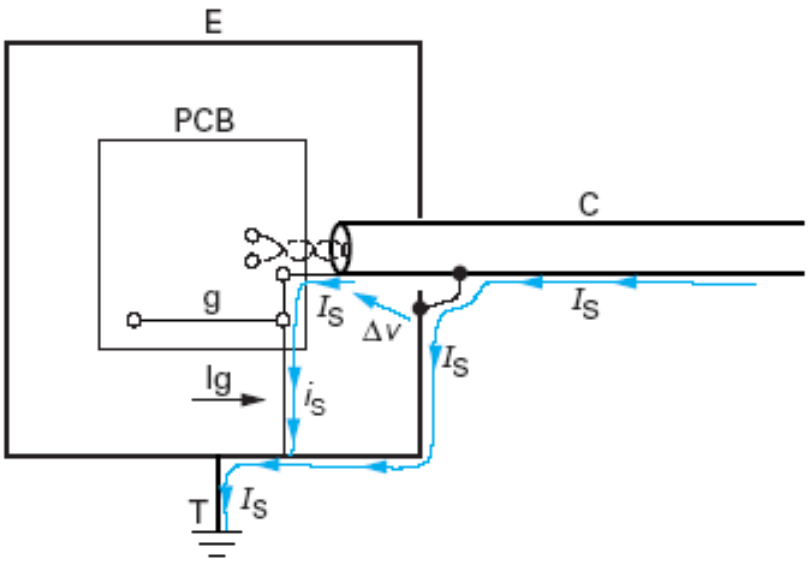

(c)

Shielded cables

End of shielding braid? Solutions [Radialex®]

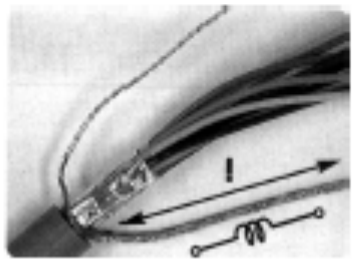

☹

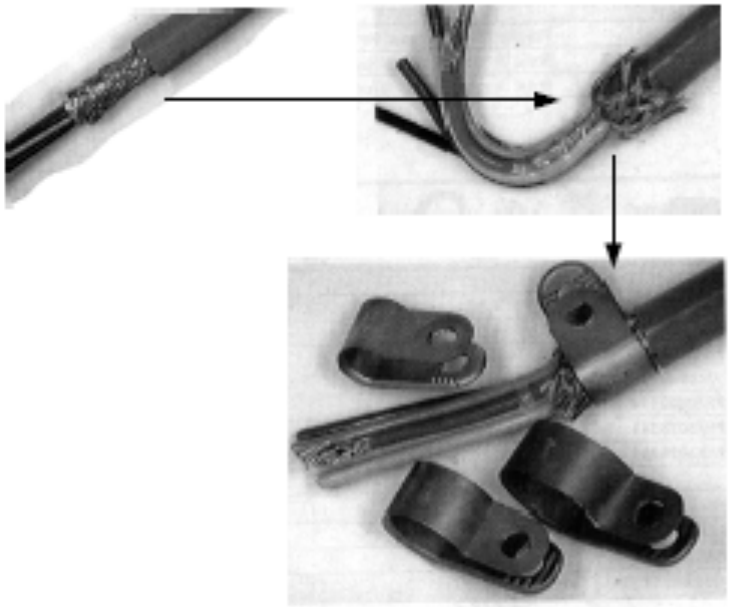

☺