Data format of the optimal power flow engine

Florin Capitanescu (ULg)

December 4, 2009

1 Generalities

This data format is the property of University of Liege.
Data file for the Optimal Power Flow (OPF) and Power Flow engines are identical. Each solver reads only the data it needs.
Data appear as records with predefined names: BUS_OPF, LINE_OPF, etc.
Each record finishes with ";".
At the end of the optimization process, if the OPF converges, a file "final.dat" having the same format is automatically produced.

2 BUS_OPF record

Data relative to all buses must be defined previous to any other record. This record contains the following fields:

1. NAME (maximum 19 characters) : name of the bus (must not contain any blank).
2. ZONE (maximum 19 characters) : name of the zone of which the bus belongs (must not contain any blank).
3. Vnom (kV) : the nominal voltage at this bus.
4. Vmin (kV) : the lower voltage limit at this bus.
5. Vmax (kV) : the upper voltage limit at this bus.

3 LOAD_OPF record

This record contains the following fields:

1. NAME LOAD (maximum 19 characters) : name of the load, generally having the first letter "L" (must not contain any blank).
2. NAME BUS (maximum 19 characters) : name of the bus where the laod is connected (must not contain any blank).
3. P (MW) : the load active power demand.

4. Q (Mvar) : the load reactive power demand.

5. FRAC (positive real) : represents the fraction of the total load which is allowed to be shed[1] when load shedding is considered as control variable. FRAC belongs to the interval [0;1], where 0 corresponds to no load shedding and 1 to the curtailment of the whole load.

6. FRACmin (positive real) : is the minimal fraction of load shedding allowed at this bus (it is generally equal to 0).

7. FRACmax (positive real) : is the maximal fraction of load shedding allowed at this bus (practically should not be greater than 0.2).

8. ALLOWsh (binary) : is a decision variable to cope with some "fictious" loads which may produce active and/or reactive power. If ALLOWsh=0 the load can not be taken as control variable while if ALLOWsh=1, it can be be taken as control variable.

4 LINE_OPF record

This record contains the following fields:

1. NAME (maximum 19 characters) : name of the line (must not contain any blank).

2. ORIGIN (maximum 9 characters) : name of the origin bus of the line (must not contain any blank).

3. END (maximum 9 characters) : name of the ending bus of the line (must not contain any blank).

4. R (Ω) : the line resistance.

5. X (Ω) : the line reactance.

6. G/2 (μS) : the half line conductance (it is generally equal to 0).

7. wC/2 (μS) : the half of the line susceptance.

8. Snom (MVA) : the apparent power of the line (in the OPF computation it corresponds to the maximal apparent power limit[2]).

9. STATUS (binary) : status of the line breaker (equal to 1 if it is connected and 0 if it is disconnected).

The line model is shown in Fig. 1.

[1] load shedding is performed under contant power factor

[2] The OPF includes thermal constraints on the longitudinal branch current and not on the power flow.

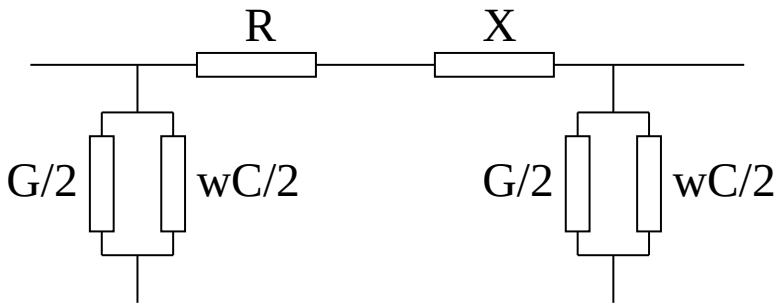

Figure 1: Line model

5 TRFO_OPF record

This record contains the following fields:

1. NAME (maximum 19 characters) : name of the transformer (must not contain any blank).
2. ORIGIN (maximum 9 characters) : name of the origin bus of the transformer (must not contain any blank).
3. END (maximum 9 characters) : name of the ending bus of the transformer (must not contain any blank).
4. R (% pu) : transformer resistance on the base V_{b1} (ORIGIN bus voltage) and Snom.
5. X (% pu) : transformer reactance on the base V_{b1} (ORIGIN bus voltage) and Snom.
6. G (% pu) : transformer conductance on the base V_{b1} (ORIGIN bus voltage) and Snom (it is generally equal to 0).
7. B (% pu) : transformer susceptance on the base V_{b1} and Snom (it is generally equal to 0).
8. r (%) : transformer ratio.
9. ang (degrees) : transformer angle (is equal to 0 if it does not correspond to a phase shifter).
10. Snom (MVA) : the apparent power of the transformer (in the OPF computation it corresponds to the maximal apparent power limit).
11. STATUS (binary) : status on/off of the of the transformer breaker (equal to 1 if it is connected and 0 if it is disconnected).

The general model of a transformer is shown in Fig. 2.

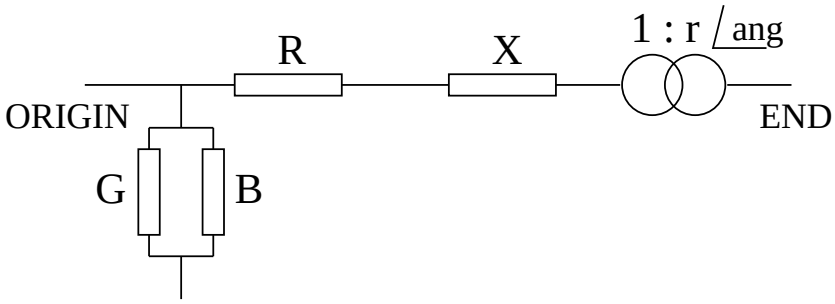

Figure 2: General model of a transformer

6 LTC_OPF record

This record contains the following fields:

1. NAME (maximum 19 characters) : name of the transformer equipped with a LTC (must not contain any blank).
2. BUS (maximum 9 characters) : name of the bus where the voltage is controlled[3].
3. rmin (%) : lower transformer ratio limit.
4. rmax (%) : upper transformer ratio limit.
5. NBPOS (natural) : total number of tap positions.
6. EPS (pu) : the half of deadband of the controlled voltage.
7. Vo (pu) : the desired value of the voltage at the controlled bus.

The step size is computed by the formula: (rmax-rmin)/(NBPOS-1).

7 PHSH_OPF record

This record contains the following fields:

1. NAME (maximum 19 characters) : name of the transformer equiped with phase shift (must not contain any blank).
2. BUS (maximum 9 characters) : name of the bus where the angle is controlled[4] (must not contain any blank).
3. ANGmin (%) : lower transformer angle limit.
4. ANGmax (%) : upper transformer angle limit.
5. NBPOS (natural) : total number of tap positions.

[3] it must be one of the terminal buses of the transformer
[4] it must be one of the terminal buses of the transformer

8 GEN_OPF record

This record contains the following fields:

1. NAME GENERATOR (maximum 9 characters) : name of the generator, generally having the first letter “G” (must not contain any blank).
2. NAME BUS (maximum 9 characters) : name of the bus where the generator is connected (must not contain any blank).
3. NAME CONTROLLED BUS (maximum 9 characters) : name of the bus whose voltage is controlled[5] (must not contain any blank).
4. P (MW) : the active power generated.
5. Q (Mvar) : the reactive power generated.
6. Vo (pu) : the terminal voltage setpoint (if Vo=0. the generator is treated as having a constant reactive power output).
7. Snom (MVA) : the generator apparent power.
8. Pmin (MW) : the generator lower active power limit.
9. Pmax (MW) : the generator upper active power limit.
10. Qmin (MVar) : the generator lower reactive power limit.
11. Qmax (MVar) : the generator upper reactive power limit.
12. STATUS (binary) : is the status of the generator’ breaker (equal to 1 if connected and 0 if disconnected).

9 SHUNT_OPF record

Shunts are treated as constant admittance in the OPF program (i.e. as $b_{sh} = const.$, where $Q_{sh} = b_{sh}V^2$). This record contains the following fields:

1. NAME (maximum 9 characters) : shunt name (must not contain any blank).
2. BUS (maximum 9 characters) : name of the bus where the shunt is connected (must not contain any blank).
3. Q (MVar) : the reactive power produced at 1 pu of voltage. A positive (resp. negative) value corresponds to a capacitor (resp. inductor).
4. Qmin (MVar) : lower reactive power limit produced by the shunt at 1 pu of voltage.
5. Qmax (MVar) : upper reactive power limit produced by the shunt at 1 pu of voltage.

[5] the software does not include for the time being the possibility to control other bus voltage than that of the connection bus

6. dQstep (MVar) : the reactive power of the shunt discrete step.

7. STATUS (binary) : is the status of the shunt' breaker (equal to 1 if connected and 0 if disconnected).

10 COSTCURVE_OPF record

This record is read by the OPF software only.
The cost curve for the i-th generator has the quadratic form $C(P_{gi}) = a_i + b_i P_{gi} + c_i P_{gi}^2$.

1. NAME GENERATOR (maximum 9 characters) : generator name (must not contain any blank).

2. a_i : cost coefficient from the generator cost curve formula.

3. b_i : cost coefficient from the generator cost curve formula.

4. c_i : cost coefficient from the generator cost curve formula.

The linear cost curves are obtaine by setting $c_i = 0$. However, the current OPF version does not allow to define piece-wise linear cost curves.

11 COSTSHED_OPF record

This record is read by the OPF software only. One assumes a linear cost curve for the curtailment of the i-th load: $C(P_{li}) = d_i P_{li}$.

1. NAME LOAD (maximum 9 characters) : load name (must not contain any blank).

2. d_i : cost coefficient from the load cost curve formula.

12 SLACK_OPF record

This record contains only one field:

1. NAME BUS (maximum 9 characters) : name of the bus which is taken as phase reference (must not contain any blank). As we express the voltage in rectangular coordinated that means that the imaginary part of the voltage at the slack bus must be 0.

Note that, unlike the classical PF computation where the active power of the "slack" generator covers the network active power losses, in the OPF software, depending of the objective function, the active power of the "slack" generator may participate at the optimization process (e.g. according to its cost curve for the OPF objective of minimum generation cost). In particular, for the OPF objective of minimum active power losses, the slack bus alone covers the losses, while all others generators active powers are frozen.

13 INITSOL_OPF record

This record contains the following fields:

1. NAME BUS (maximum 9 characters) : name of the bus (must not contain any blank).
2. Vreal (pu) : real part of the voltage at the concerned bus.
3. Vimag (pu) : imaginary part of the voltage at the concerned bus.

This record contains the real and imaginary part of the voltage at every bus. If this information lacks, then a flat start (Vreal=1. and Vimag=0., except for PV generator buses where Vreal=Vo) is used to initialize the OPF or the PF softwares. The OPF works generally better if it is initialized with a converged PF solution.